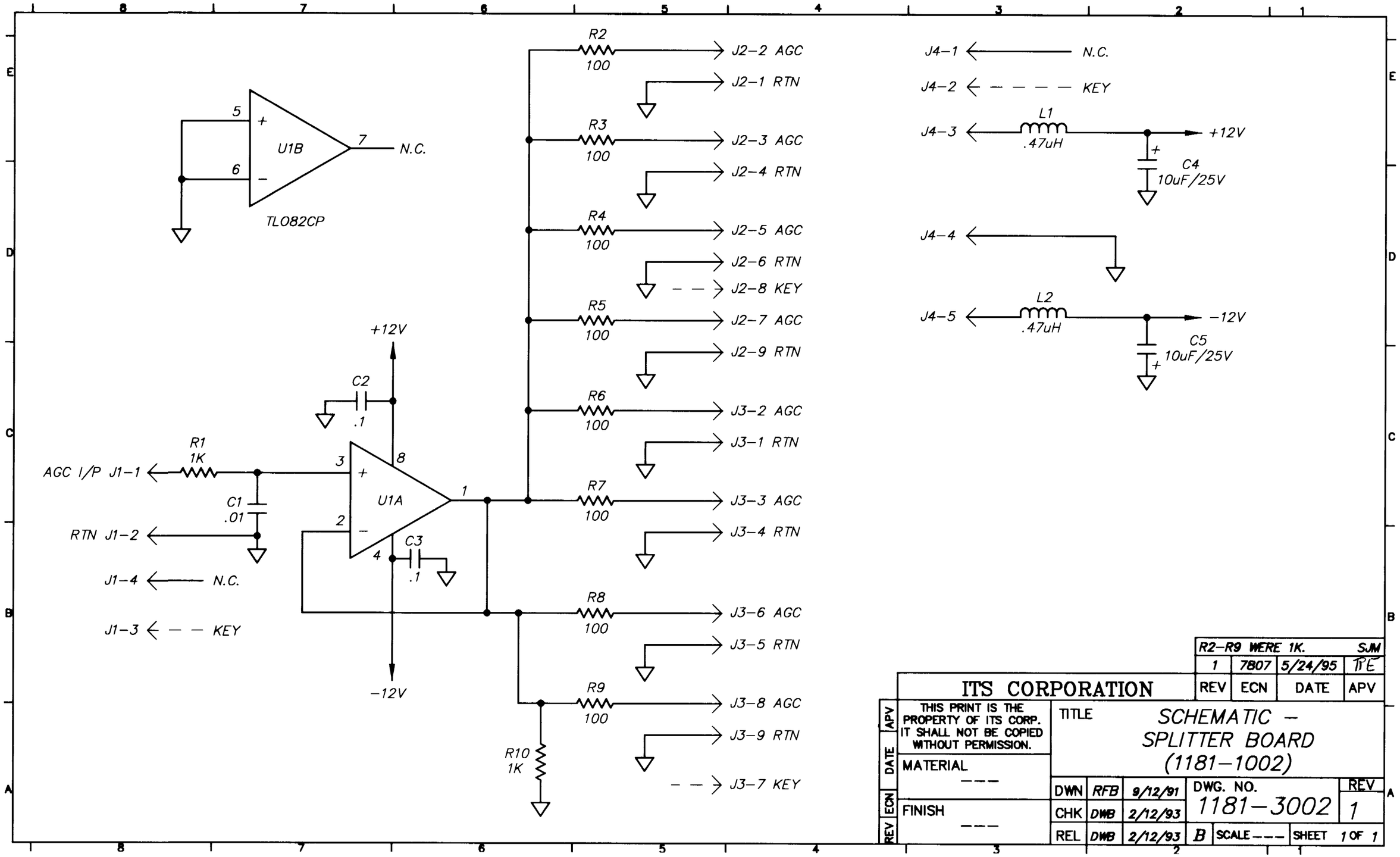


| REV | ECN | DATE | APV |
|---|---|---|---|
| | | R2-R9 WERE 1K. | SJM |
| 1 | 7807 | 5/24/95 | TE |

ITS CORPORATION

THIS PRINT IS THE PROPERTY OF ITS CORP. IT SHALL NOT BE COPIED WITHOUT PERMISSION.

MATERIAL ---

FINISH ---

TITLE SCHEMATIC – SPLITTER BOARD (1181-1002)

| | | | |
|---|---|---|---|
| DWN | RFB | 9/12/91 | DWG. NO. 1181-3002 |
| CHK | DWB | 2/12/93 | REV 1 |
| REL | DWB | 2/12/93 | B SCALE --- SHEET 1 OF 1 |