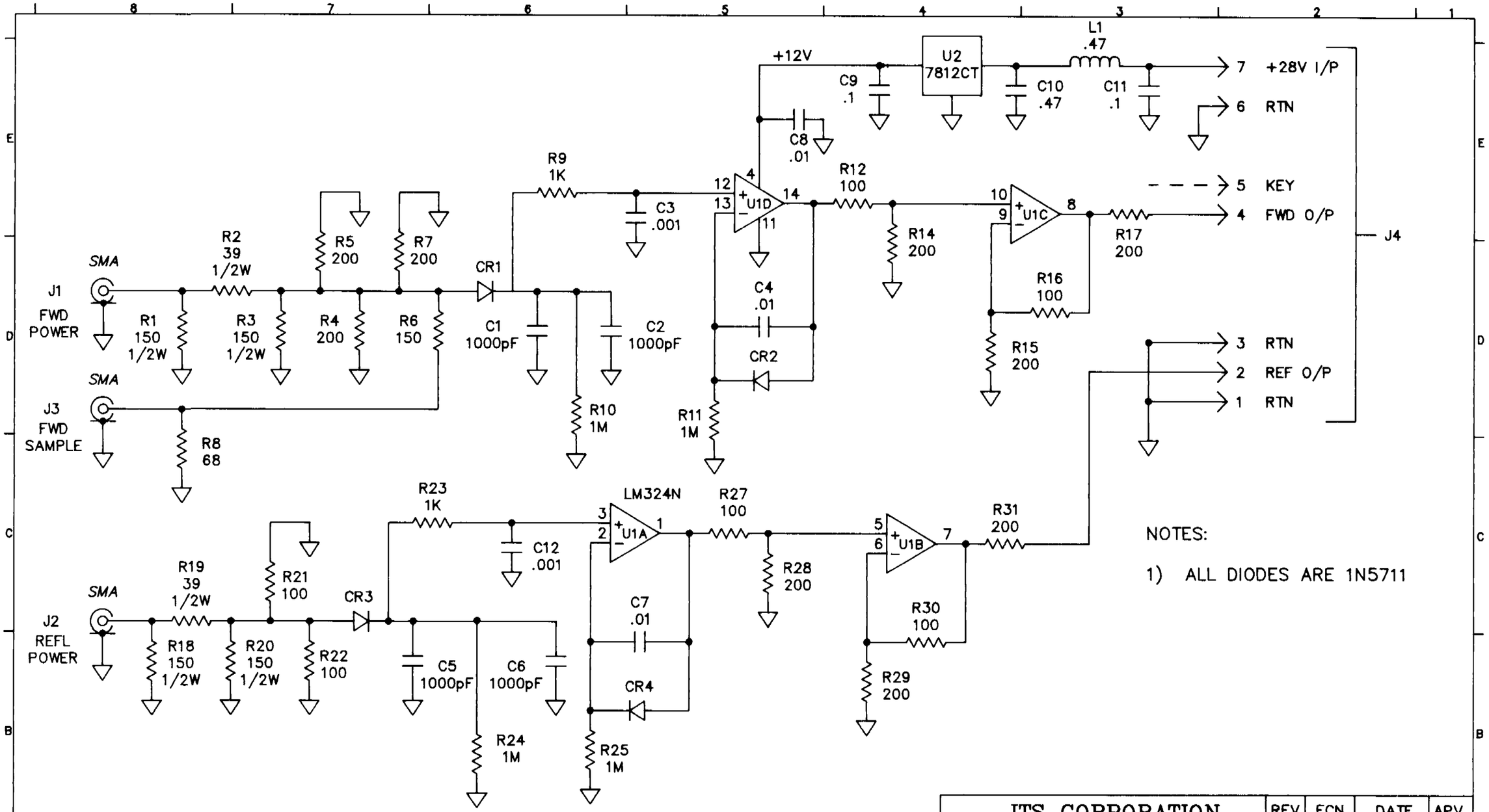

NOTES:

1) ALL DIODES ARE 1N5711

ITS CORPORATION	REV	ECN	DATE	APV
DELETED NOTE #2. CHGD C1 1000pF TO C2. DELETED R13, R26. (PJK)	1	7526	6/20/94	RE

THIS PRINT IS THE PROPERTY OF ITS CORP. IT SHALL NOT BE COPIED WITHOUT PERMISSION.

MATERIAL ---

FINISH ---

TITLE SCHEMATIC – DUAL PEAK DET BD, SINGLE SUPPLY (1227–1307)

DWN	PJK	1/4/94	DWG. NO. 1227–3307	REV 1
CHK	DWB	1/7/94		
REL	DWB	1/7/94	B SCALE ---	SHEET 1 OF 1