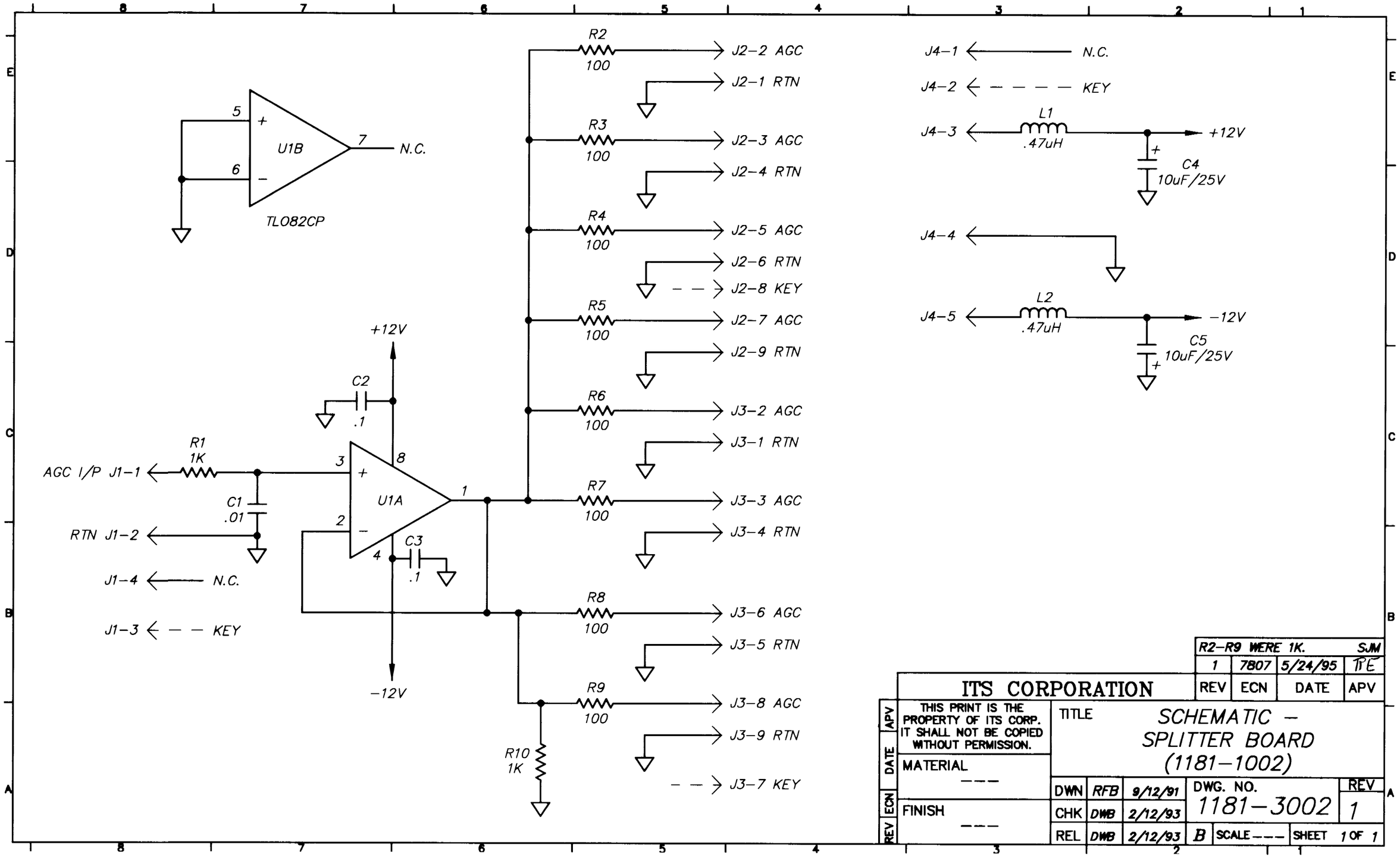

REV	ECN	DATE	APV
		R2-R9 WERE 1K.	SJM
1	7807	5/24/95	TE

ITS CORPORATION

THIS PRINT IS THE PROPERTY OF ITS CORP. IT SHALL NOT BE COPIED WITHOUT PERMISSION.

MATERIAL ---

FINISH ---

TITLE SCHEMATIC – SPLITTER BOARD (1181-1002)

DWN	RFB	9/12/91	DWG. NO. 1181-3002
CHK	DWB	2/12/93	REV 1
REL	DWB	2/12/93	B SCALE --- SHEET 1 OF 1