NOTES: (UNLESS OTHERWISE NOTED)

1) RESISTOR VALUES ARE IN OHMS, 1/4W, ±5%.
2) CAPACITOR VALUES ARE IN "UF".
3) C9 & C19 ARE NOT USED ON THIS SCHEMATIC, ASSY OR P/L, BUT ARE INCLUDED ON THE BOARD ARTWORK AND SILKSCREEN FOR USE ON OTHER BOARD ASSEMBLIES. DO NOT USE THESE SYMBOL NUMBERS FOR ANY SUBSEQUENT CHANGES TO BOARD.
4) INSTALL L2 WITH 2 DOTS BETWEEN J14 AND J16 FOR 90 TO 110 MHz.
INSTALL L2 WITH 3 DOTS BETWEEN J14 AND J16 FOR 70 TO 90 MHz.
INSTALL L2 WITH 4 DOTS BETWEEN J14 AND J16 FOR 50 TO 70 MHz.

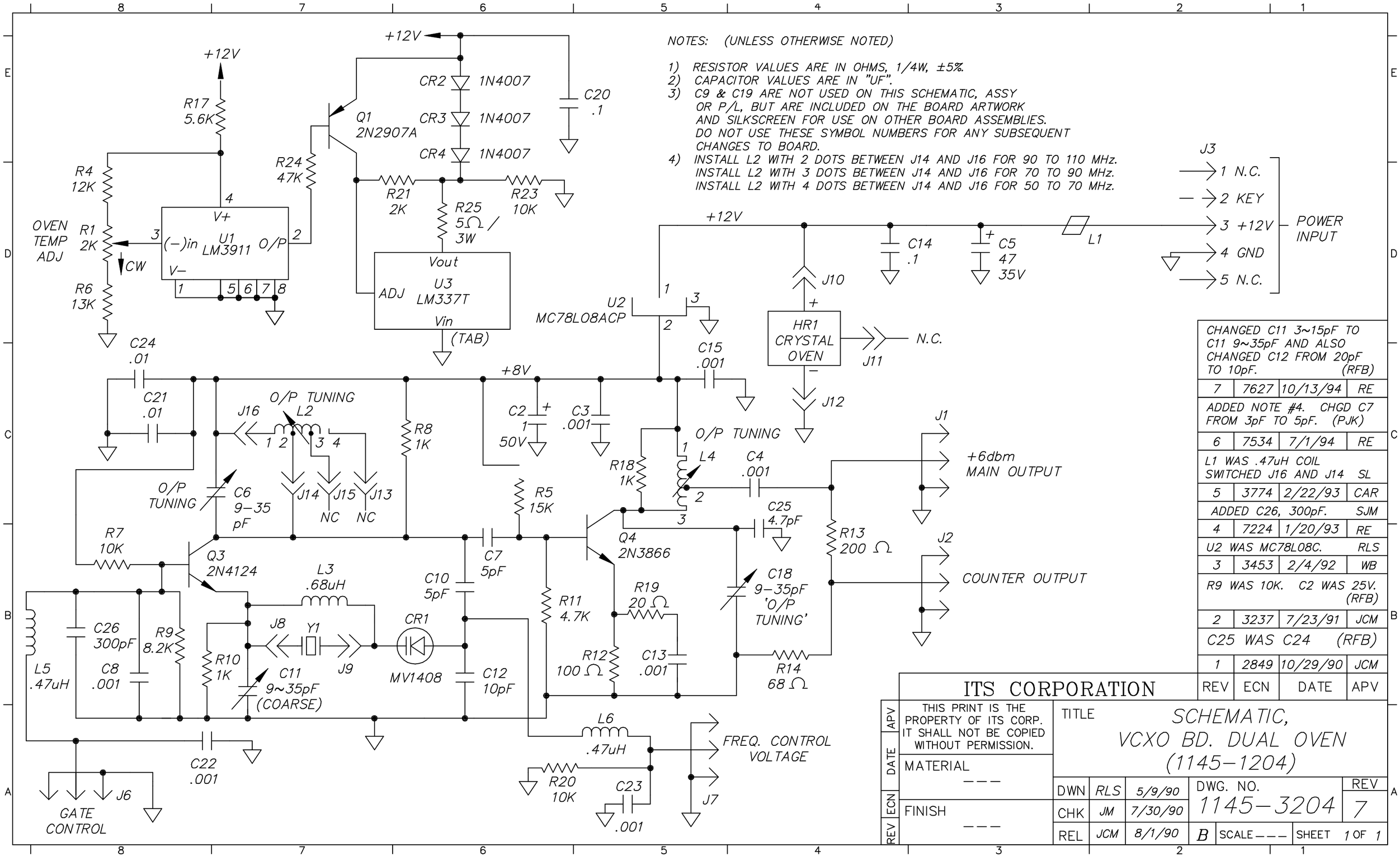

REV	ECN	DATE	APV
	CHANGED C11 3~15pF TO C11 9~35pF AND ALSO CHANGED C12 FROM 20pF TO 10pF. (RFB)		
7	7627	10/13/94	RE
	ADDED NOTE #4. CHGD C7 FROM 3pF TO 5pF. (PJK)		
6	7534	7/1/94	RE
	L1 WAS .47uH COIL SWITCHED J16 AND J14		SL
5	3774	2/22/93	CAR
	ADDED C26, 300pF.		SJM
4	7224	1/20/93	RE
	U2 WAS MC78L08C.		RLS
3	3453	2/4/92	WB
	R9 WAS 10K. C2 WAS 25V. (RFB)		
2	3237	7/23/91	JCM
	C25 WAS C24 (RFB)		
1	2849	10/29/90	JCM

ITS CORPORATION

THIS PRINT IS THE PROPERTY OF ITS CORP. IT SHALL NOT BE COPIED WITHOUT PERMISSION.

MATERIAL ---

FINISH ---

TITLE SCHEMATIC, VCXO BD. DUAL OVEN (1145–1204)

DWN	RLS	5/9/90
CHK	JM	7/30/90
REL	JCM	8/1/90

DWG. NO. 1145–3204 REV 7

B SCALE --- SHEET 1 OF 1