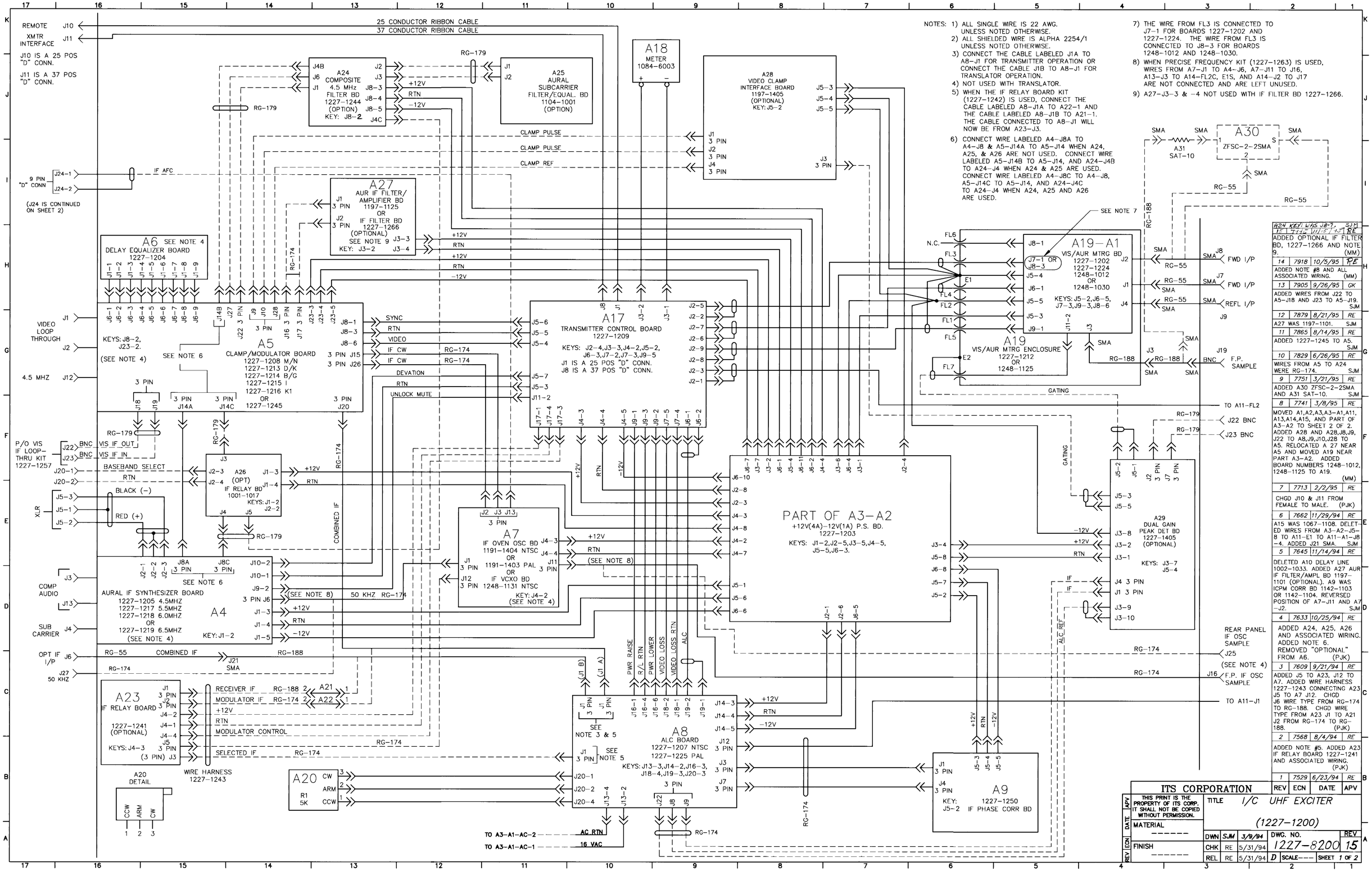

NOTES:
1) ALL SINGLE WIRE IS 22 AWG. UNLESS NOTED OTHERWISE.
2) ALL SHIELDED WIRE IS ALPHA 2254/1 UNLESS NOTED OTHERWISE.
3) CONNECT THE CABLE LABELED J1A TO A8-J1 FOR TRANSMITTER OPERATION OR CONNECT THE CABLE J1B TO A8-J1 FOR TRANSLATOR OPERATION.
4) NOT USED WITH TRANSLATOR.
5) WHEN THE IF RELAY BOARD KIT (1227-1242) IS USED, CONNECT THE CABLE LABELED A8-J1A TO A22-1 AND THE CABLE LABELED A8-J1B TO A21-1. THE CABLE CONNECTED TO A8-J1 WILL NOW BE FROM A23-J3.
6) CONNECT WIRE LABELED A4-J8A TO A4-J8 & A5-J14A TO A5-J14 WHEN A24, A25, & A26 ARE NOT USED. CONNECT WIRE LABELED A5-J14B TO A5-J14, AND A24-J4B TO A24-J4 WHEN A24 & A25 ARE USED. CONNECT WIRE LABELED A4-J8C TO A4-J8, A5-J14C TO A5-J14, AND A24-J4C TO A24-J4 WHEN A24, A25 AND A26 ARE USED.
7) THE WIRE FROM FL3 IS CONNECTED TO J7-1 FOR BOARDS 1227-1202 AND 1227-1224. THE WIRE FROM FL3 IS CONNECTED TO J8-3 FOR BOARDS 1248-1012 AND 1248-1030.
8) WHEN PRECISE FREQUENCY KIT (1227-1263) IS USED, WIRES FROM A7-J1 TO A4-J6, A7-J11 TO J16, A13-J3 TO A14-FL2C, E1S, AND A14-J2 TO J17 ARE NOT CONNECTED AND ARE LEFT UNUSED.
9) A27-J3-3 & -4 NOT USED WITH IF FILTER BD 1227-1266.

REV	ECN	DATE	APV
14	7918	10/5/95	RE
	ADDED OPTIONAL IF FILTER BD, 1227-1266 AND NOTE 9. (MM)		
13	7905	9/26/95	GK
	ADDED WIRES FROM J22 TO A5-J18 AND J23 TO A5-J19. SJM		
12	7879	8/21/95	RE
	A27 WAS 1197-1101. SJM		
11	7865	8/14/95	RE
	ADDED 1227-1245 TO A5. SJM		
10	7829	6/26/95	RE
	WIRES FROM A5 TO A24 WERE RG-174. SJM		
9	7751	3/21/95	RE
	ADDED A30 ZFSC-2-2SMA AND A31 SAT-10. SJM		
8	7741	3/8/95	RE
	MOVED A1,A2,A3,A3-A1,A11, A13,A14,A15, AND PART OF A3-A2 TO SHEET 2 OF 2. ADDED A28 AND A28,J8,J9, J22 TO A8,J9,J10,J28 TO A5. RELOCATED A 27 NEAR A5 AND MOVED A19 NEAR PART A3-A2. ADDED BOARD NUMBERS 1248-1012, 1248-1125 TO A19. (MM)		
7	7713	2/2/95	RE
	CHGD J10 & J11 FROM FEMALE TO MALE. (PJK)		
6	7662	11/29/94	RE
	A15 WAS 1067-1108. DELETED WIRES FROM A3-A2-J5-8 TO A11-E1 TO A11-J8 -4. ADDED J21 SMA. SJM		
5	7645	11/14/94	RE
	DELETED A10 DELAY LINE 1002-1033. ADDED A27 AUR IF FILTER/AMPL BD 1197-1101 (OPTIONAL). A9 WAS ICPM CORR BD 1142-1103 OR 1142-1104. REVERSED POSITION OF A7-J11 AND A7-J2. SJM		
4	7633	10/25/94	RE
	ADDED A24, A25, A26 AND ASSOCIATED WIRING. ADDED NOTE 6. REMOVED "OPTIONAL" FROM A6. (PJK)		
3	7609	9/21/94	RE
	ADDED J5 TO A23, J12 TO A7. ADDED WIRE HARNESS 1227-1243 CONNECTING A23 J5 TO A7 J12. CHGD J6 WIRE TYPE FROM RG-174 TO RG-188. CHGD WIRE TYPE FROM A23 J1 TO A21 J2 FROM RG-174 TO RG-188. (PJK)		
2	7568	8/4/94	RE
	ADDED NOTE #5. ADDED A23 IF RELAY BOARD 1227-1241 AND ASSOCIATED WIRING. (PJK)		
1	7529	6/23/94	RE

ITS CORPORATION

THIS PRINT IS THE PROPERTY OF ITS CORP. IT SHALL NOT BE COPIED WITHOUT PERMISSION.

MATERIAL ------

FINISH ------

TITLE I/C UHF EXCITER (1227-1200)

DWN	SJM	3/9/94	DWG. NO. 1227-8200
CHK	RE	5/31/94	REV 15
REL	RE	5/31/94	D SCALE--- SHEET 1 OF 2