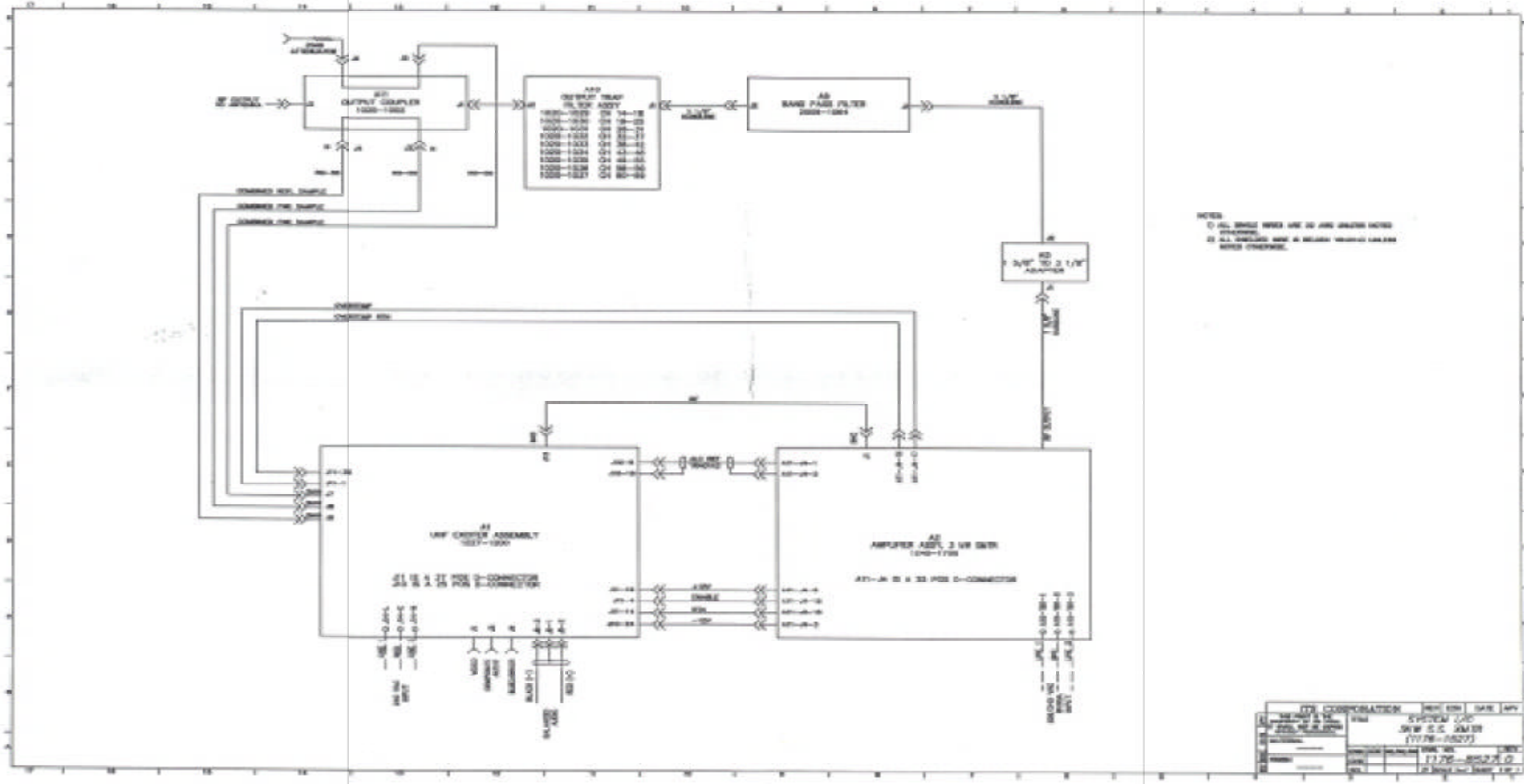
OUTPUT COUPLER
BAND PASS FILTER
UHF CHIRPER ASSEMBLY
AMPLIFIER ASSY, 2 WB SWR
NOTES: