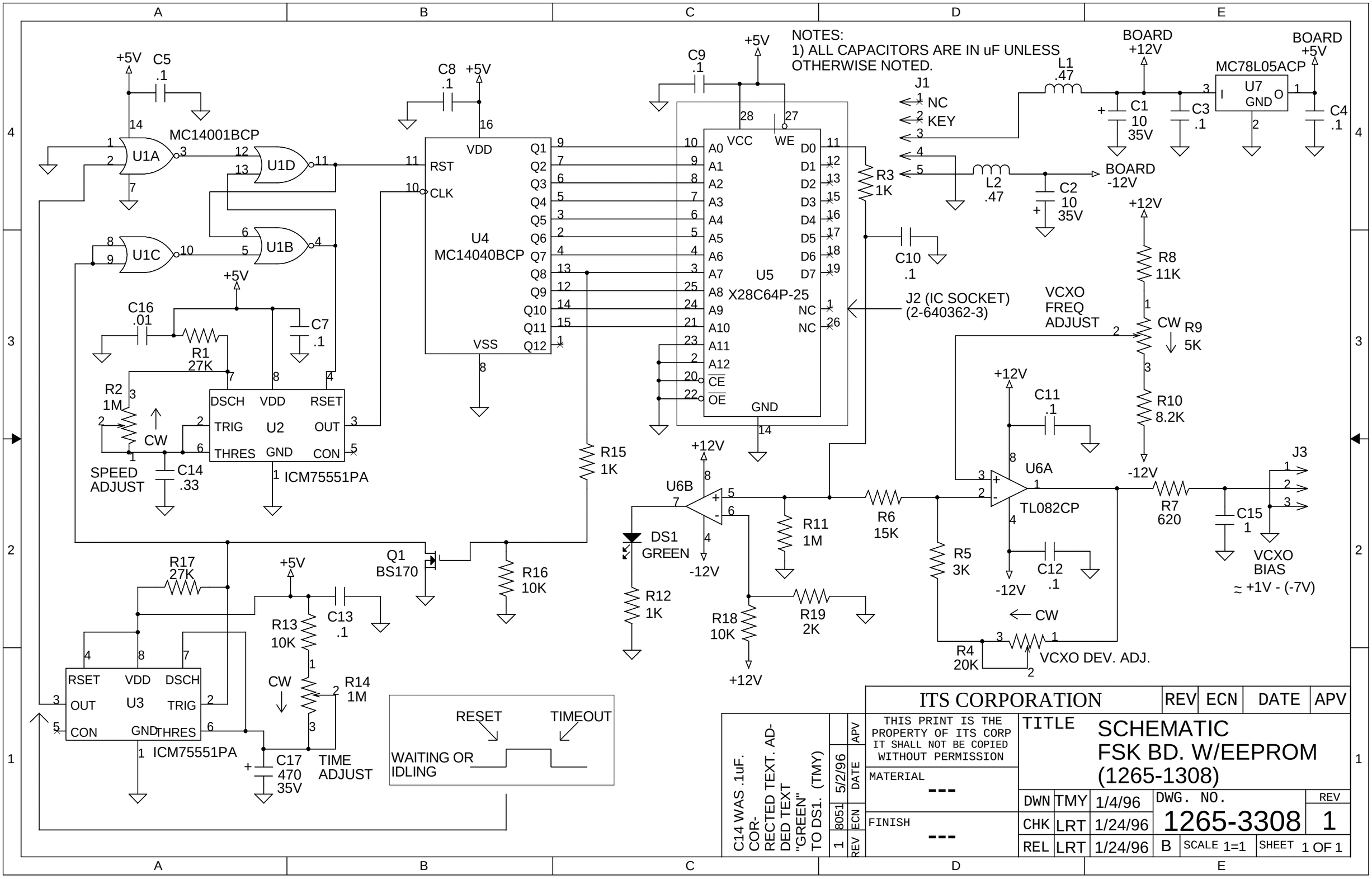

ITS CORPORATION	REV	ECN	DATE	APV
C14 WAS .1uF. CORRECTED TEXT. ADDED TEXT "GREEN" TO DS1. (TMY)	APV			
	DATE	8051	5/2/96	
	REV	ECN		
	1			

THIS PRINT IS THE PROPERTY OF ITS CORP IT SHALL NOT BE COPIED WITHOUT PERMISSION

MATERIAL ---

FINISH ---

TITLE SCHEMATIC FSK BD. W/EEPROM (1265-1308)

DWN	TMY	1/4/96	DWG. NO.	REV
CHK	LRT	1/24/96	1265-3308	1
REL	LRT	1/24/96	B SCALE 1=1	SHEET 1 OF 1