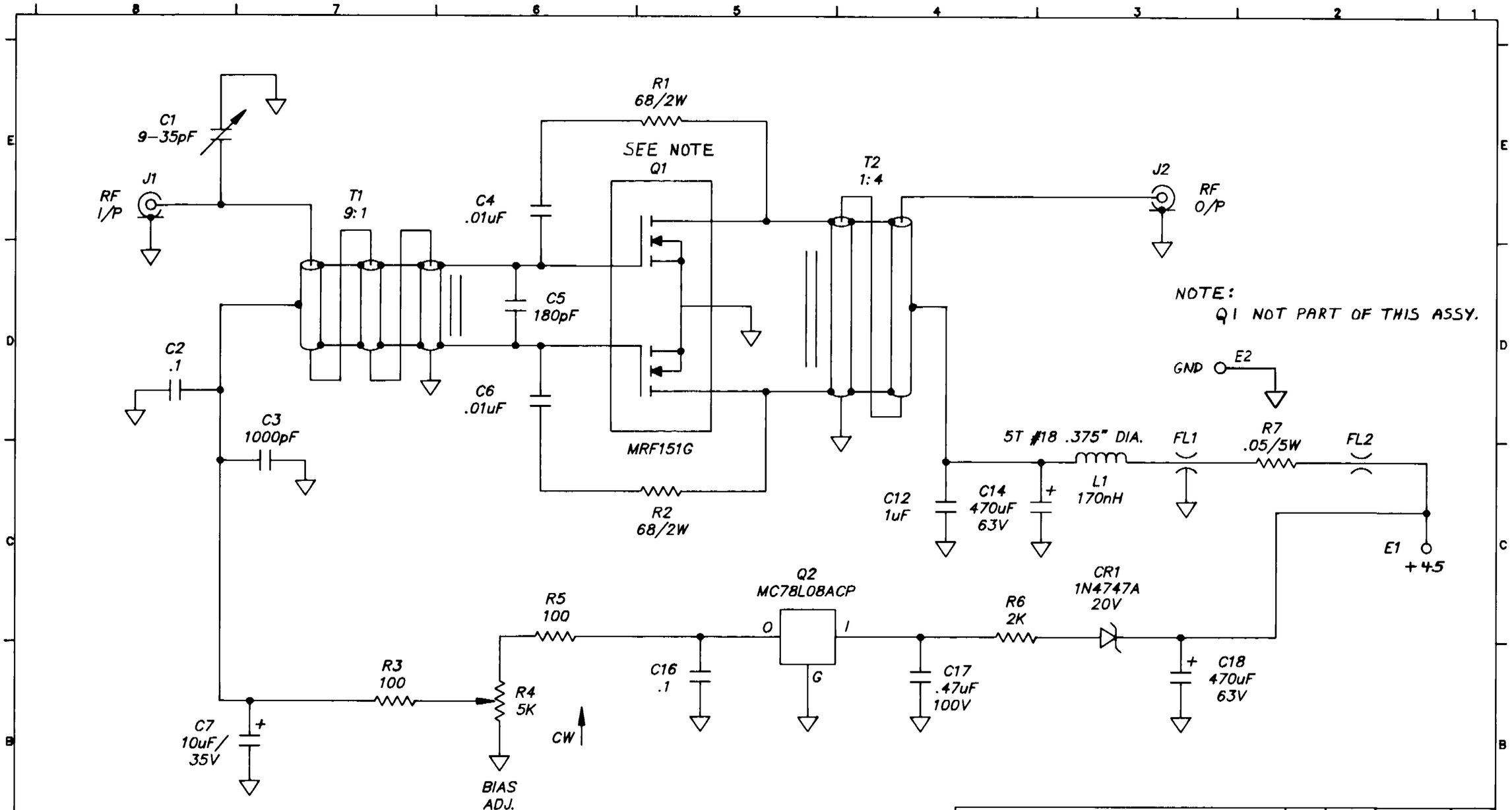

ITS CORPORATION	REV	ECN	DATE	APV

THIS PRINT IS THE PROPERTY OF ITS CORP. IT SHALL NOT BE COPIED WITHOUT PERMISSION.

MATERIAL ---

FINISH ---

TITLE SCHEMATIC – LOW BAND AMPLIFIER, +45V, I/P (1198–1605)

DWN	SJM	2/24/93	DWG. NO. 1198–3605	REV 0
CHK	DWB	3-1-93		
REL	DWB	3-1-93	B SCALE ---	SHEET 1 OF 1