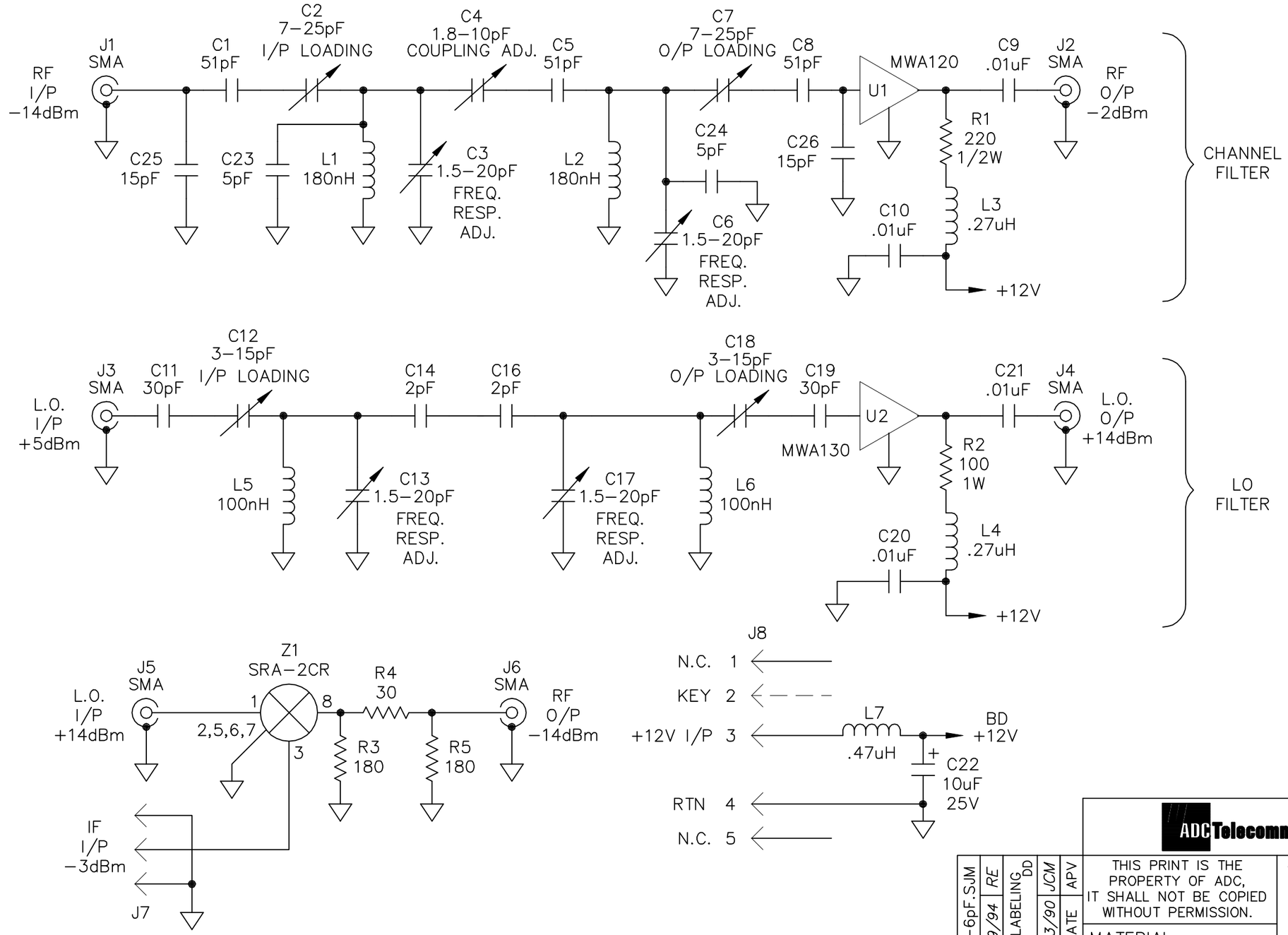

NOTE:
L1 & L2: 180nH = 7T
#18 .25" DIA.
L5 &L6: 100nH = 5T
#20 .25" DIA.
ALL RESISTOR VALUES ARE IN OHMS UNLESS OTHERWISE NOTED.

ADC Telecommunications

REV	ECO	DATE	APV
2	7472	3/29/94	RE
1	2834	12/13/90	JCM

C4 WAS 1.5−6pF.SJM
ADDED MISC. LABELING DD

THIS PRINT IS THE PROPERTY OF ADC, IT SHALL NOT BE COPIED WITHOUT PERMISSION.

MATERIAL −−−−−

FINISH −−−−−

TITLE SCH, VHF FILTER/ MIXER BOARD (1153−1101)

DWN	RLS	7/27/90	DWG. NO. 1153−3101	REV 2
CHK	JRA	7/31/90		
REL	JRA	8/2/90	B SCALE −−−	SHEET 1 OF 1