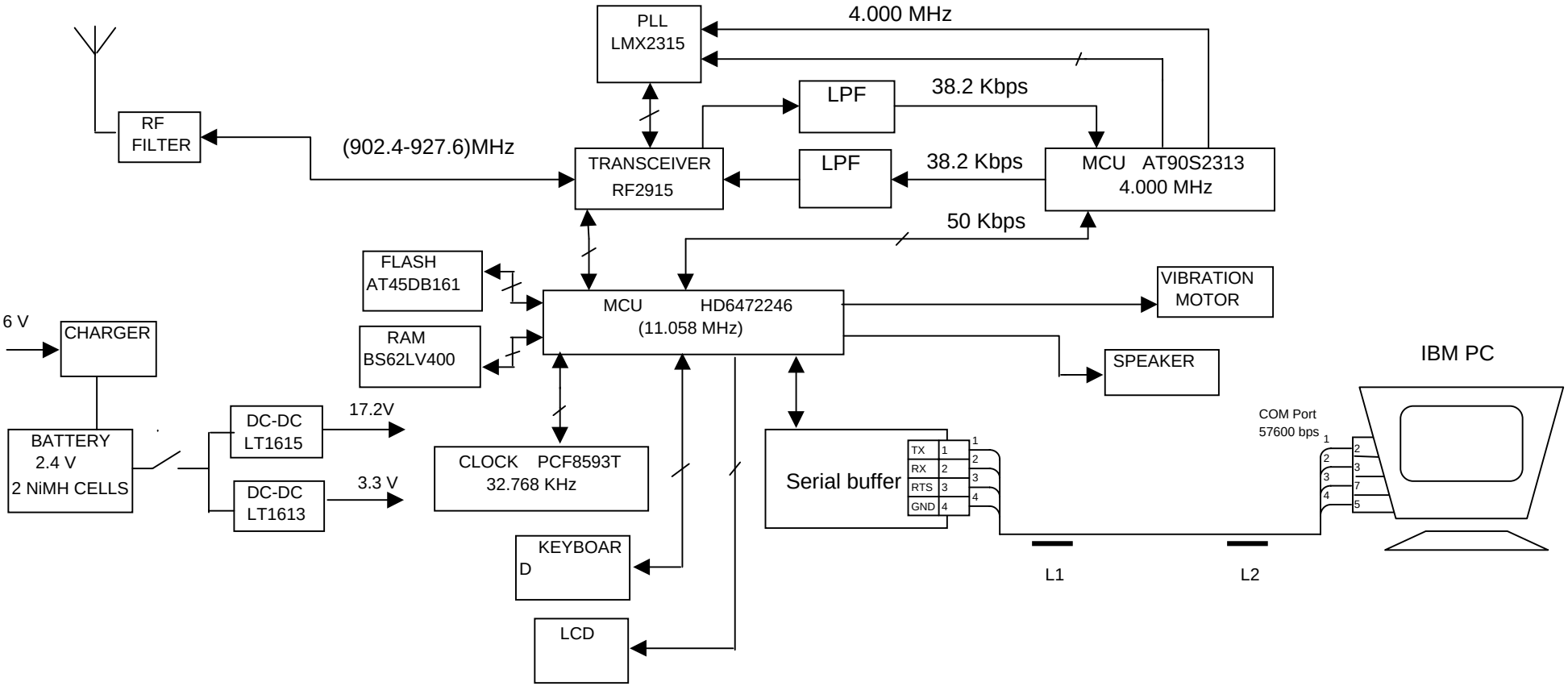


Fig.1. Functional Block Diagram CYBIKO