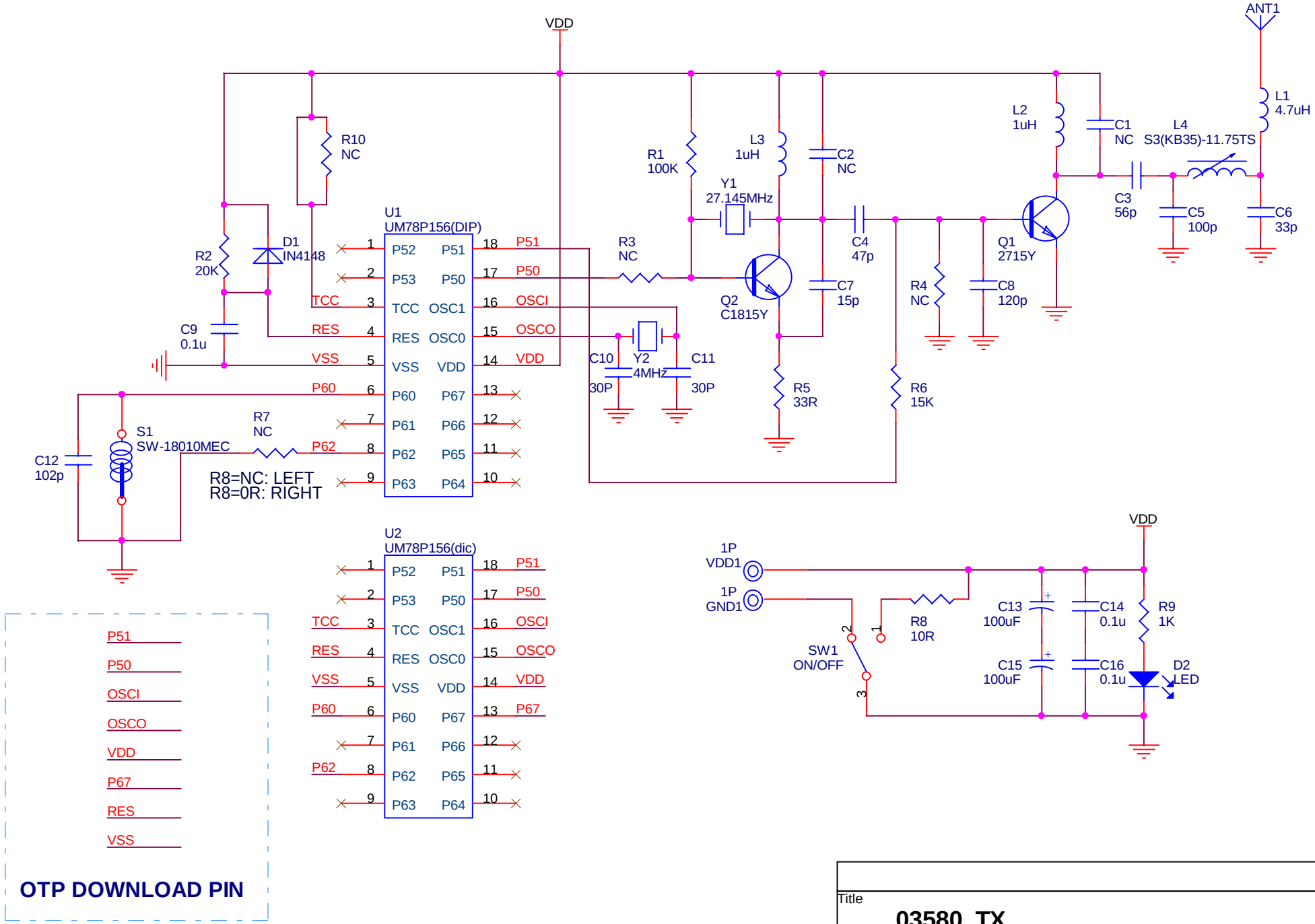

Title	03580_TX	
Size A	Document Number <Doc>	Rev <RevCode>
Date: Thursday, July 30, 2009	Sheet 1 of 1	