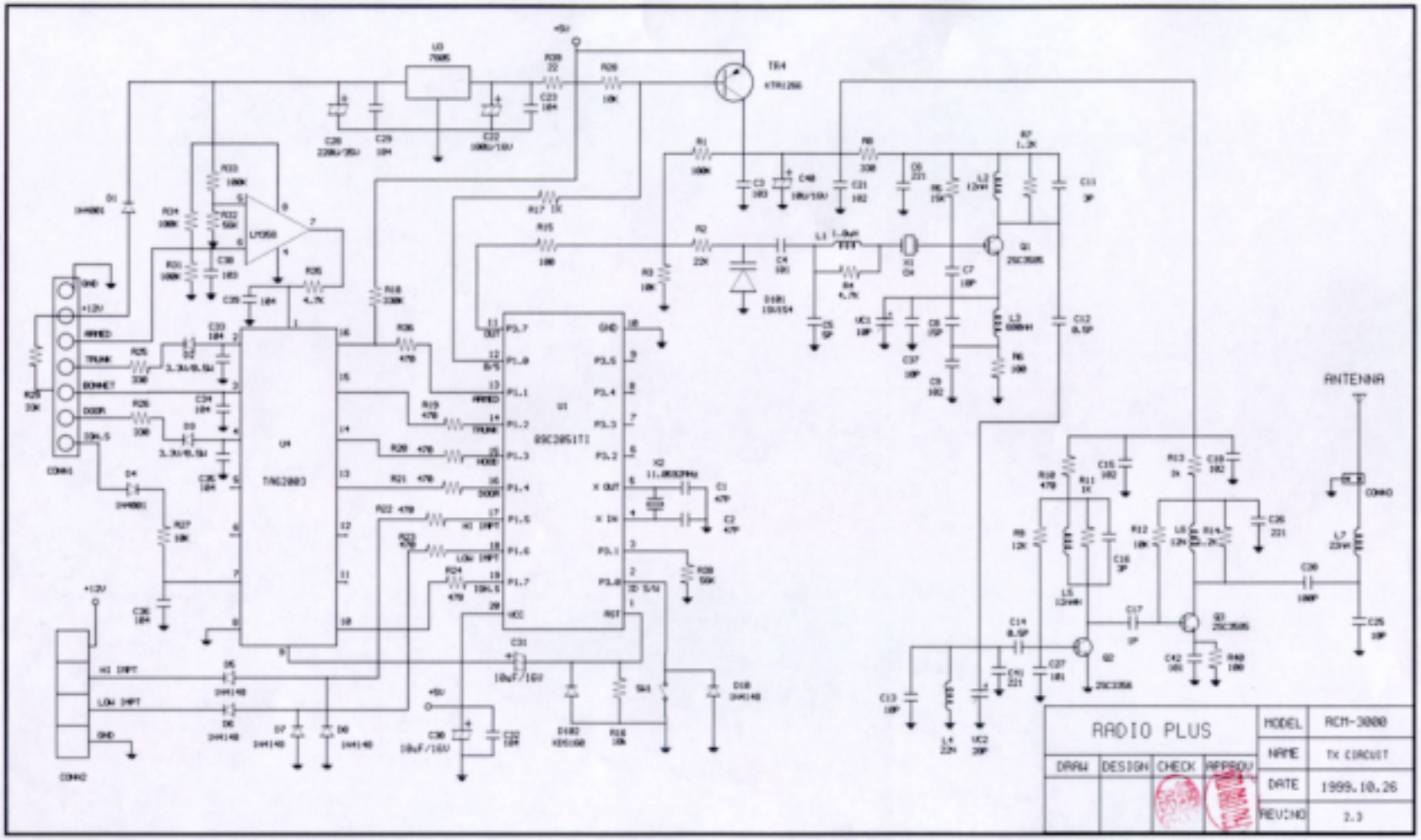
RADIO PLUS
MODEL
RCM-3000
NAME
TX CIRCUIT
DATE
1999.10.26
REV.NO
2.3
DRAW
DESIGN
CHECK
APPROV
ANTENNA
CON1
CON2
U1
89C205ITI
U4
TA62003
TR4
2SC3506
LM358
ARMED
TRUNK
BONNET
DOOR
IGN.S
HI INPT
LOW INPT
GND
+12V
+5V