NORMARC 7013

INSTRUMENT LANDING SYSTEM

Transmitter Figures

NAVIA AVIATION

©1999 Navia Aviation AS

Normarc®

NAVIA AVIATION

©1999 Navia Aviation AS

TABLE OF CONTENTS

1 LF1223A LOW FREQUENCY GENERATOR 7
1.1 Schematic Diagrams 7
1.2 Photos 8

2 OS1221A RF OSCILLATOR 9
2.1 Circuit Diagrams 9
2.2 Component Location 10
2.3 Photos 11

3 LPA1230A POWER AMPLIFIER 13
3.1 Photos 13

4 PA1233A POWER AMPLIFIER 15
4.1 Schematic Diagrams 15
4.2 Parts List 16
4.3 Photos 17

5 AC1226A AMPLITUDE CONTROL 19
5.1 Schematic Diagrams 19
5.2 Photos 20

6 PC1225A PHASE CONTROL 21
6.1 Schematic Diagrams 21
6.2 Photos 22

7 FD1235A FEEDBACK DETECTOR 23
7.1 Schematic Diagrams 23
7.2 Photos 24

8 CD 1237A COMBINER DETECTOR 25
8.1 Schematic Diagrams 25
8.2 Photos 26

©1999 Navia Aviation AS

 ©1999 Navia Aviation AS

LIST OF FIGURES

 ©1999 Navia Aviation AS

1 LF1223A Low Frequency Generator

1.1 Schematic Diagrams

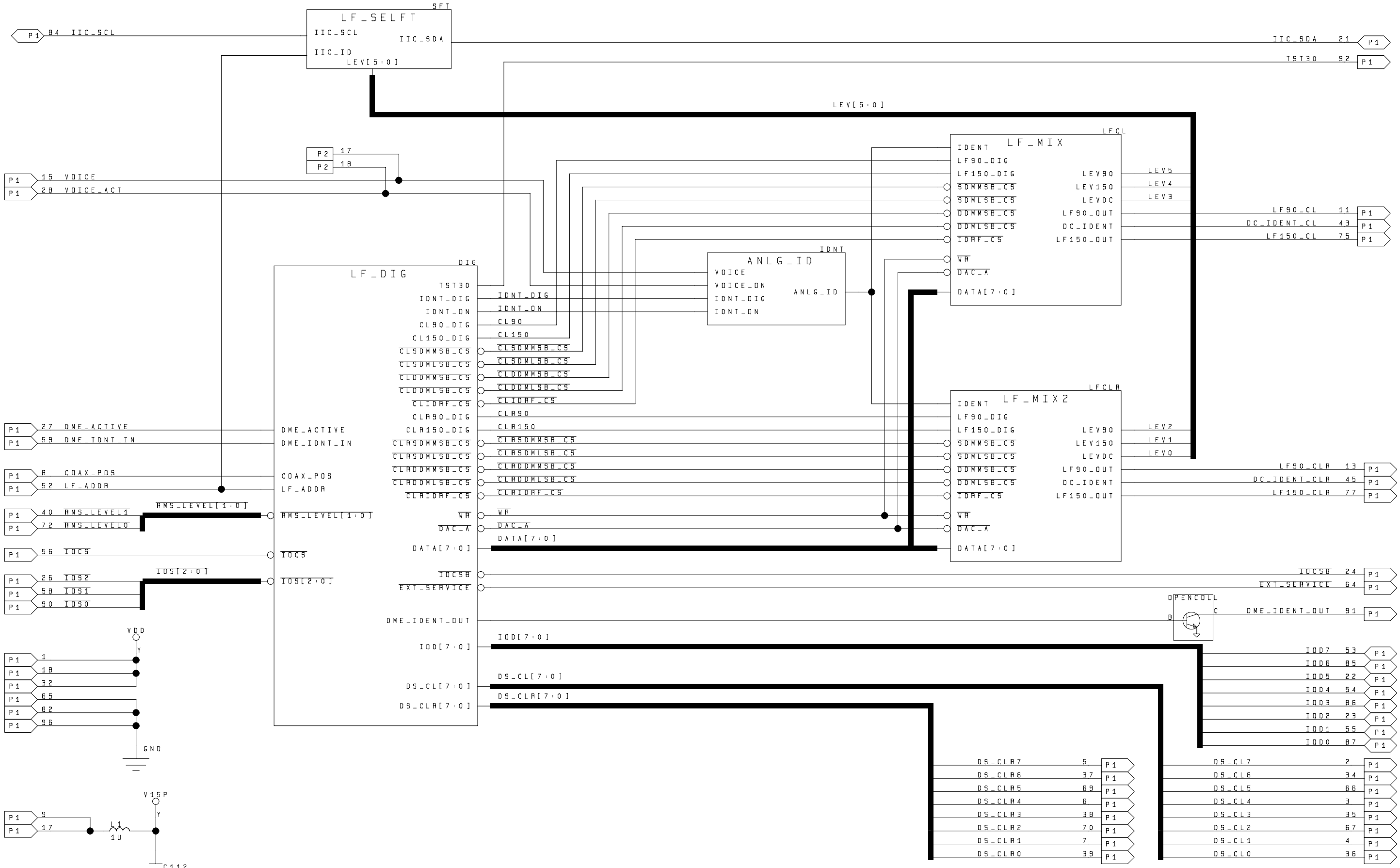

REF.NO.	ISSUE	DATE	SIGN
2837	7	13.11.96	ER
2701	6	10.04.96	ER
2498	5	29.09.95	ER
2403	4	03.07.95	ER
2259	3	16.03.95	ER
2205	2	08.02.95	ER

DESCRIPTION: CIRCUIT DIAGRAM

NAME: LF1223A

MODULE: LF1223A

Normarc

Copyright and all modification rights reserved NAVIA AVIATION AS, NORWAY

DRAWN	10.10.94	ER
CHECKED	10-11-1999_11:21	
APPR.	10.10.94	JSA

#SCH.	#HDL	SIZE	SHEET
24		A3	1

DWG.NO.: 15472

VERSION: 7

PROJECT:

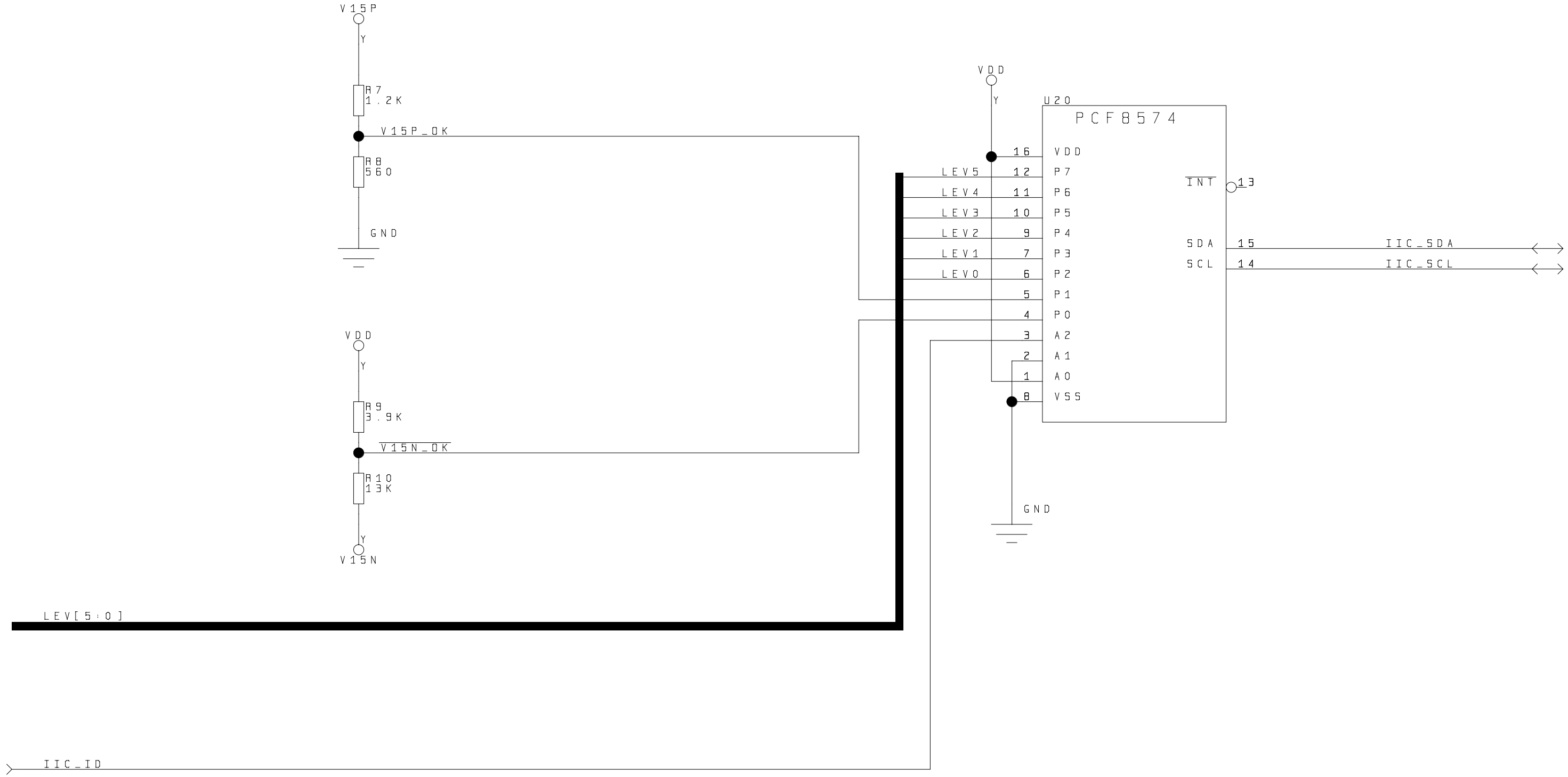

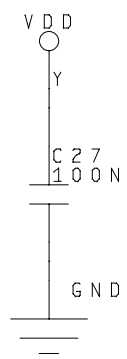

REF.NO.	ISSUE	DATE	SIGN
2837	7	13.11.96	ER
2701	6	10.04.96	ER
2498	5	29.09.95	ER
2403	4	03.07.95	ER
2259	3	16.03.95	ER
2205	2	08.02.95	ER

DESCRIPTION: CIRCUIT DIAGRAM

NAME: LF_SELFT

MODULE: LF1223A

Normarc

Copyright and all modification rights reserved NAVIA AVIATION AS, NORWAY

DRAWN	10.10.94	ER
CHECKED	11-13-1996_9:47	
APPR.	10.10.94	JSA

#SCH.	#HDL	SIZE	SHEET
24		A3	2

DWG.NO.	VERSION
15472	7

PROJECT:

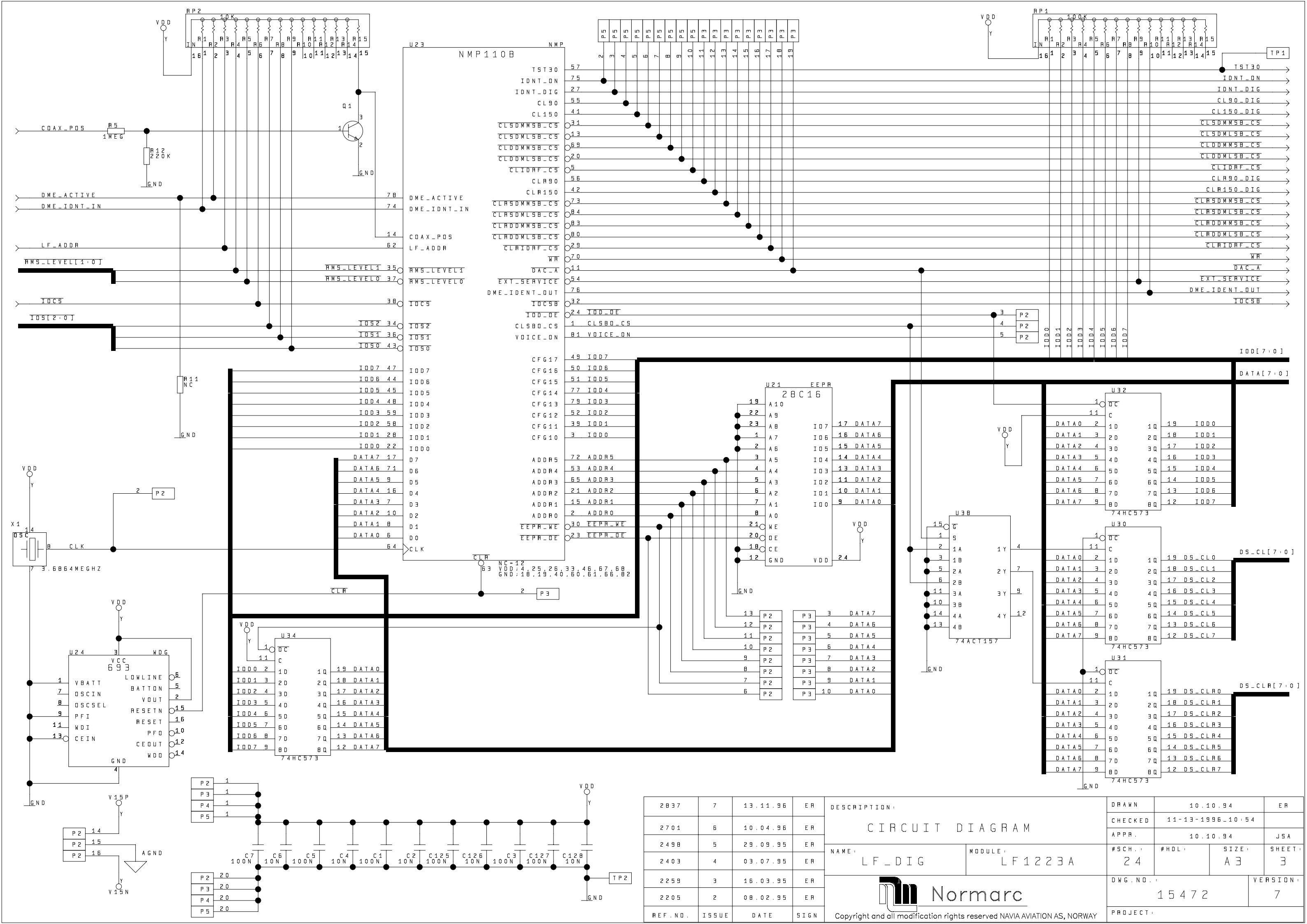

REF.NO.	ISSUE	DATE	SIGN
2837	7	13.11.96	ER
2701	6	10.04.96	ER
2498	5	29.09.95	ER
2403	4	03.07.95	ER
2259	3	16.03.95	ER
2205	2	08.02.95	ER

DESCRIPTION: CIRCUIT DIAGRAM

NAME: LF_DIG

MODULE: LF1223A

DRAWN	10.10.94	ER
CHECKED	11-13-1996_10:54	
APPR.	10.10.94	JSA

#SCH.	#HDL	SIZE	SHEET
24		A3	3

DWG.NO.	VERSION
15472	7

PROJECT:

Normarc

Copyright and all modification rights reserved NAVIA AVIATION AS, NORWAY

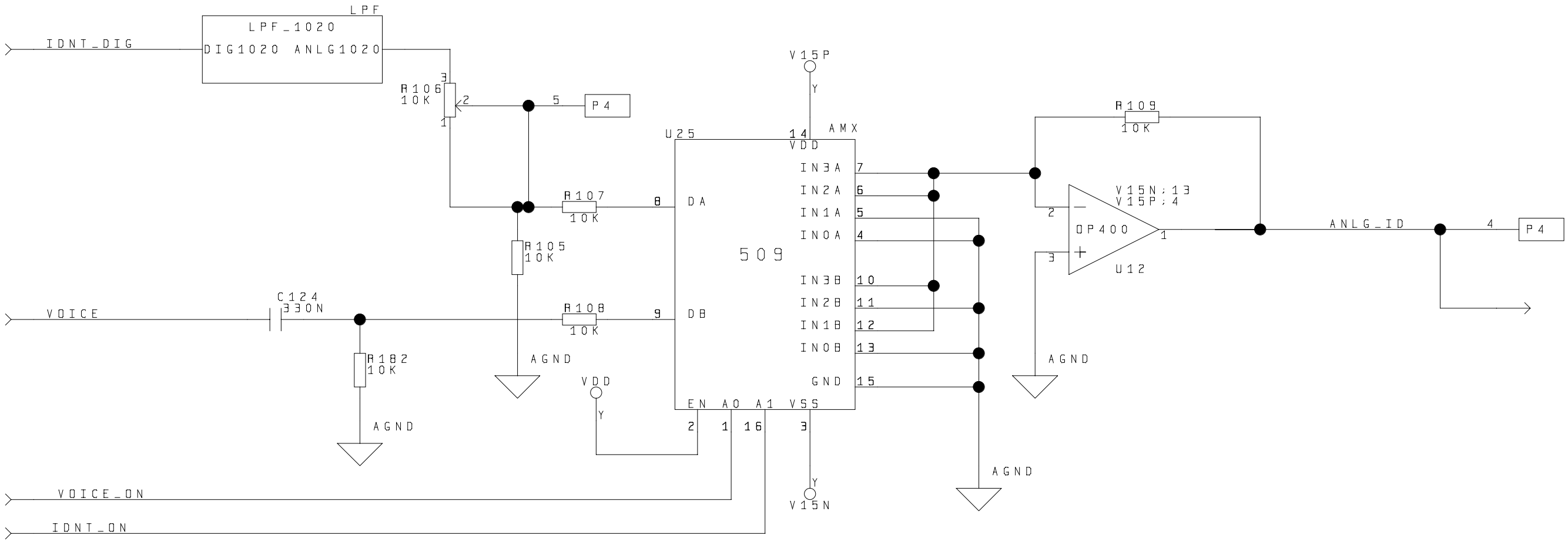

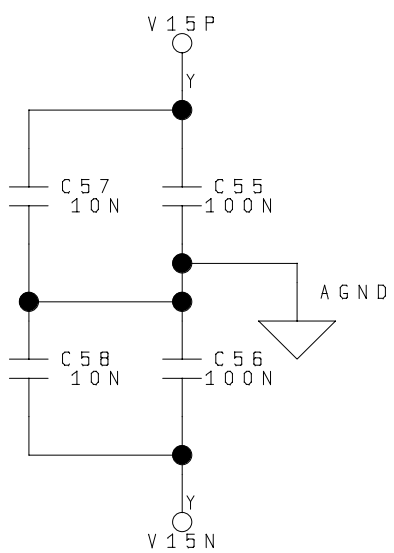

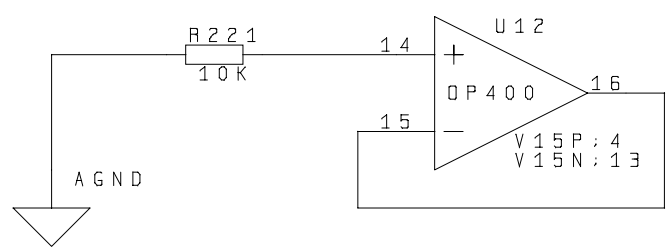

REF.NO.	ISSUE	DATE	SIGN
2837	7	13.11.96	ER
2701	6	10.04.96	ER
2498	5	29.09.95	ER
2403	4	03.07.95	ER
2259	3	16.03.95	ER
2205	2	08.02.95	ER

DESCRIPTION: CIRCUIT DIAGRAM

NAME: ANLG_ID

MODULE: LF1223A

Normarc

Copyright and all modification rights reserved NAVIA AVIATION AS, NORWAY

DRAWN	10.10.94	ER
CHECKED	11-13-1996_12:10	
APPR.	10.10.94	JSA

#SCH.	#HDL	SIZE	SHEET
24		A3	4

DWG.NO.: 15472

VERSION: 7

PROJECT:

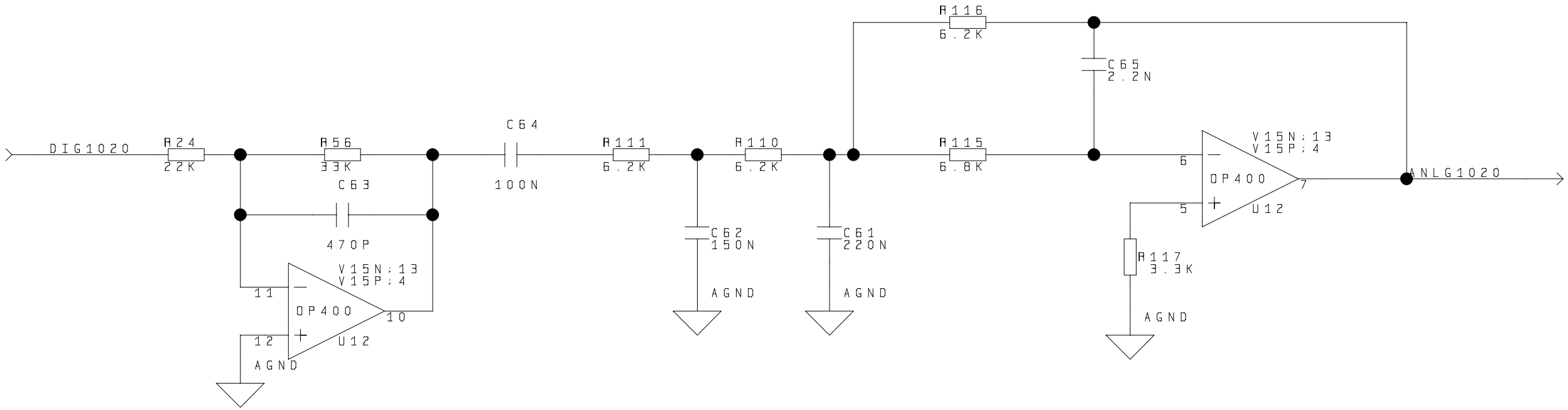

REF.NO.	ISSUE	DATE	SIGN
2837	7	13.11.96	ER
2701	6	10.04.96	ER
2498	5	29.09.95	ER
2403	4	03.07.95	ER
2259	3	16.03.95	ER
2205	2	08.02.95	ER

DESCRIPTION: CIRCUIT DIAGRAM

NAME: LPF_1020

MODULE: LF1223A

Normarc

Copyright and all modification rights reserved NAVIA AVIATION AS, NORWAY

DRAWN	10.10.94	ER
CHECKED	11-13-1996_12:09	
APPR.	10.10.94	JSA

#SCH.:	#HDL:	SIZE:	SHEET:
24		A3	5

DWG.NO.:	VERSION:
15472	7

PROJECT:

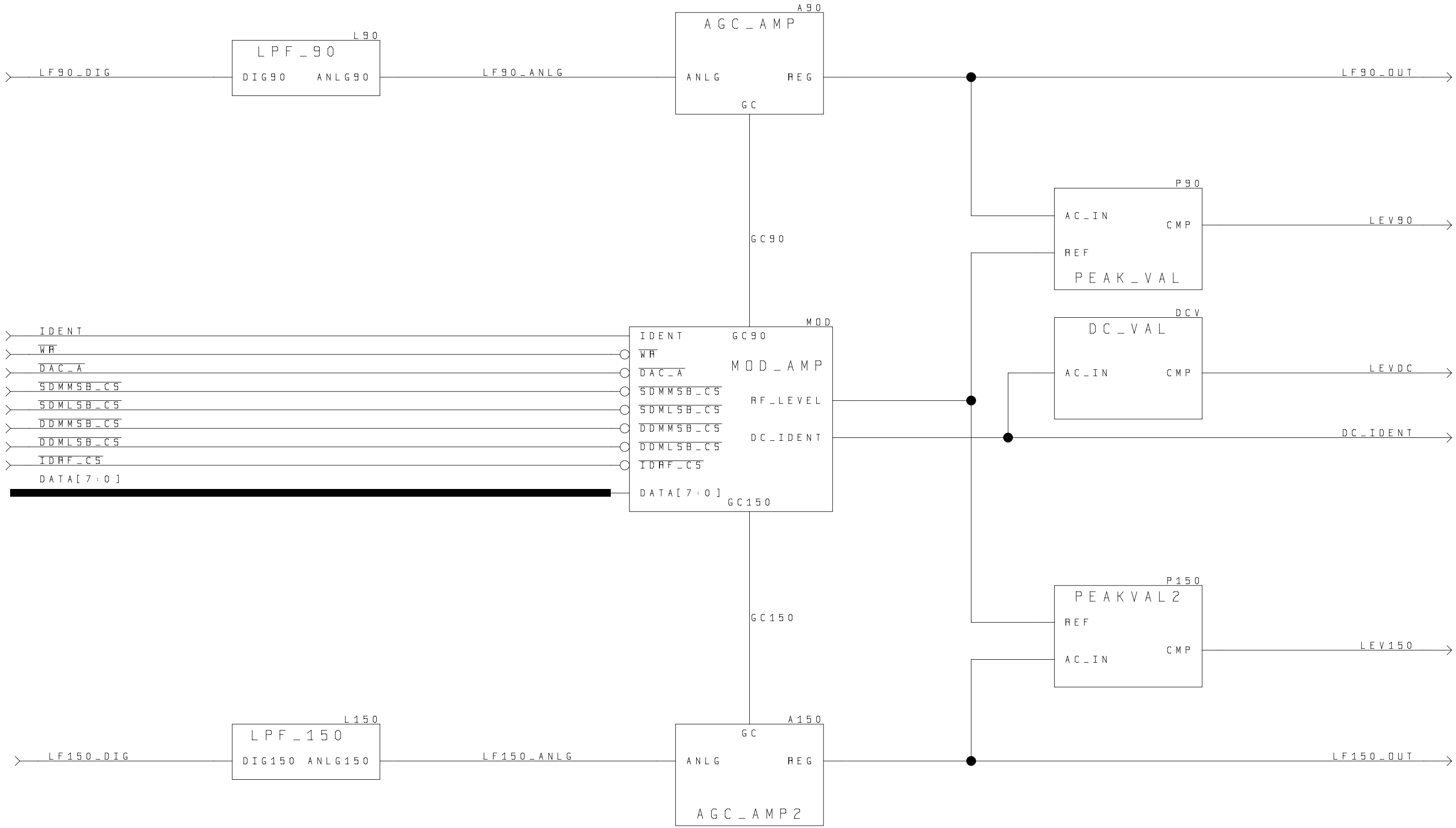

REF.NO.	ISSUE	DATE	SIGN
2837	7	13.11.96	ER
2701	6	10.04.96	ER
2498	5	29.09.95	ER
2403	4	03.07.95	ER
2259	3	16.03.95	ER
2205	2	08.02.95	ER

DESCRIPTION:
CIRCUIT DIAGRAM

NAME: LF_MIX
MODULE: LF1223A

Normarc

Copyright and all modification rights reserved NAVIA AVIATION AS, NORWAY

DRAWN	10.10.94	ER
CHECKED	11-13-1996_12:15	
APPR.	10.10.94	JSA

#SCH.	#HDL	SIZE	SHEET
24		A3	6

DWG.NO.: 15472
VERSION: 7
PROJECT:

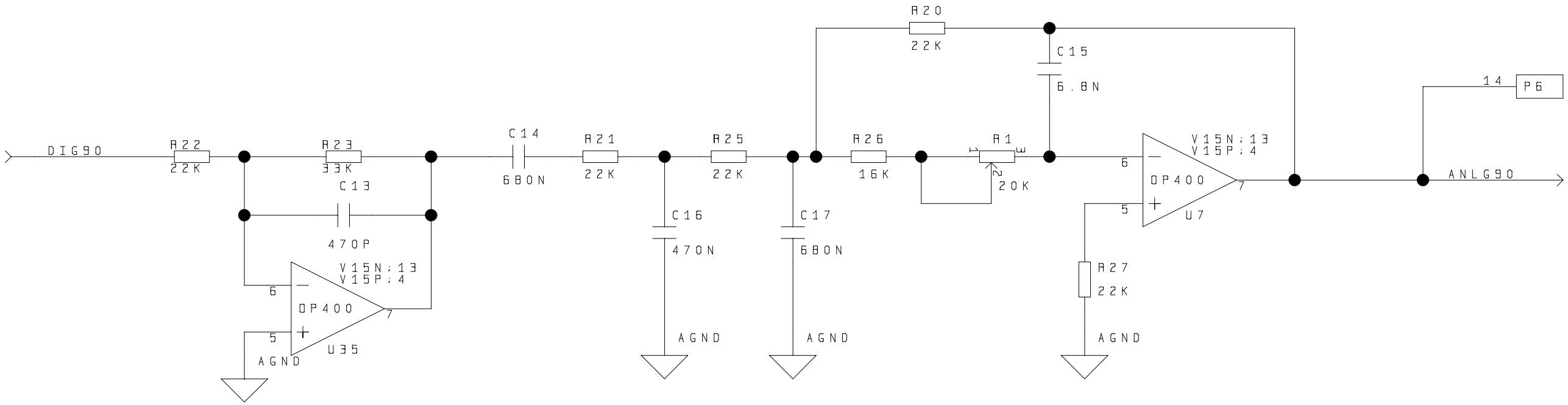

REF.NO.	ISSUE	DATE	SIGN
2837	7	13.11.96	ER
2701	6	10.04.96	ER
2498	5	29.09.95	ER
2403	4	03.07.95	ER
2259	3	16.03.95	ER
2205	2	08.02.95	ER

DESCRIPTION: CIRCUIT DIAGRAM

NAME: LPF_90

MODULE: LF1223A

Normarc

Copyright and all modification rights reserved NAVIA AVIATION AS, NORWAY

DRAWN	10.10.94	ER
CHECKED	11-13-1996_12:18	
APPR.	10.10.94	JSA

#SCH.:	#HDL:	SIZE:	SHEET:
24		A3	7

DWG.NO.:	VERSION:
15472	7

PROJECT:

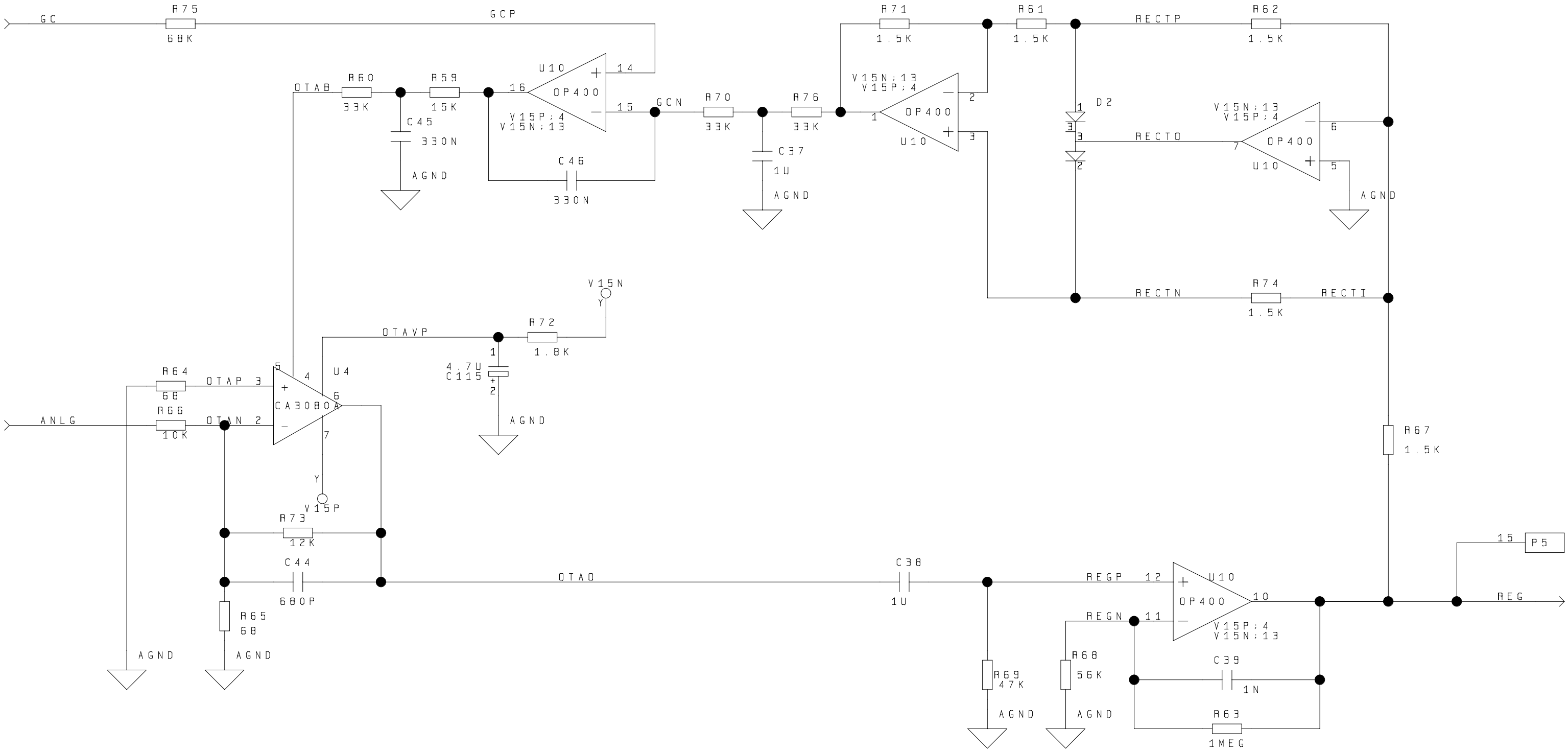

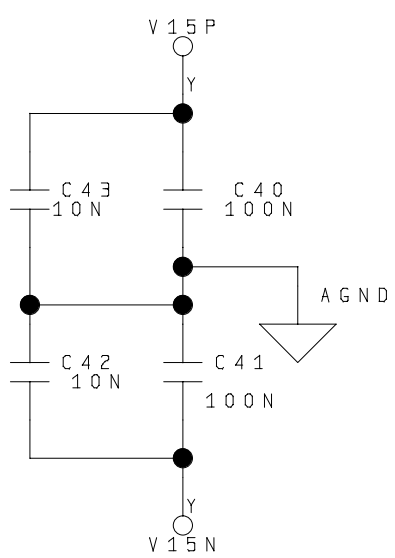

REF.NO.	ISSUE	DATE	SIGN
2837	7	13.11.96	ER
2701	6	10.04.96	ER
2498	5	29.09.95	ER
2403	4	03.07.95	ER
2259	3	16.03.95	ER
2205	2	08.02.95	ER

DESCRIPTION: CIRCUIT DIAGRAM

NAME: AGC_AMP

MODULE: LF1223A

Normarc

Copyright and all modification rights reserved NAVIA AVIATION AS, NORWAY

DRAWN	10.10.94	ER
CHECKED	11-13-1996_12:21	
APPR.	10.10.94	JSA

#SCH.	#HDL	SIZE	SHEET
24		A3	8

DWG.NO.: 15472

VERSION: 7

PROJECT:

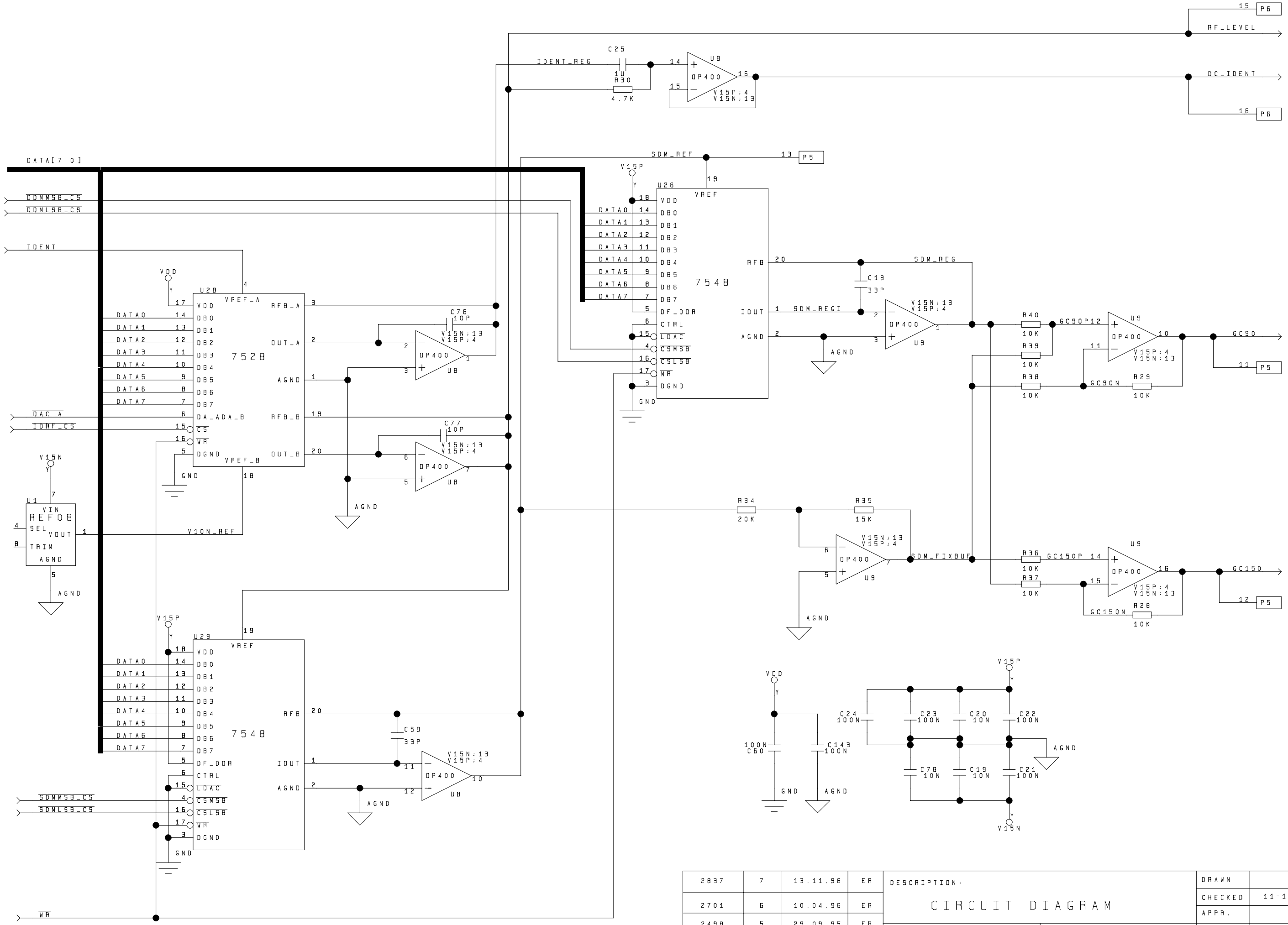

2837	7	13.11.96	ER	DESCRIPTION: CIRCUIT DIAGRAM	DRAWN	10.10.94		ER
2701	6	10.04.96	ER		CHECKED	11-13-1996_12:23		
2498	5	29.09.95	ER		APPR.	10.10.94		JSA
2403	4	03.07.95	ER	NAME: MOD_AMP / MODULE: LF1223A	#SCH.: 24	#HDL:	SIZE: A3	SHEET: 9
2259	3	16.03.95	ER	Normarc	DWG.NO.: 15472			VERSION: 7
2205	2	08.02.95	ER		PROJECT:			
REF.NO.	ISSUE	DATE	SIGN					

Copyright and all modification rights reserved NAVIA AVIATION AS, NORWAY

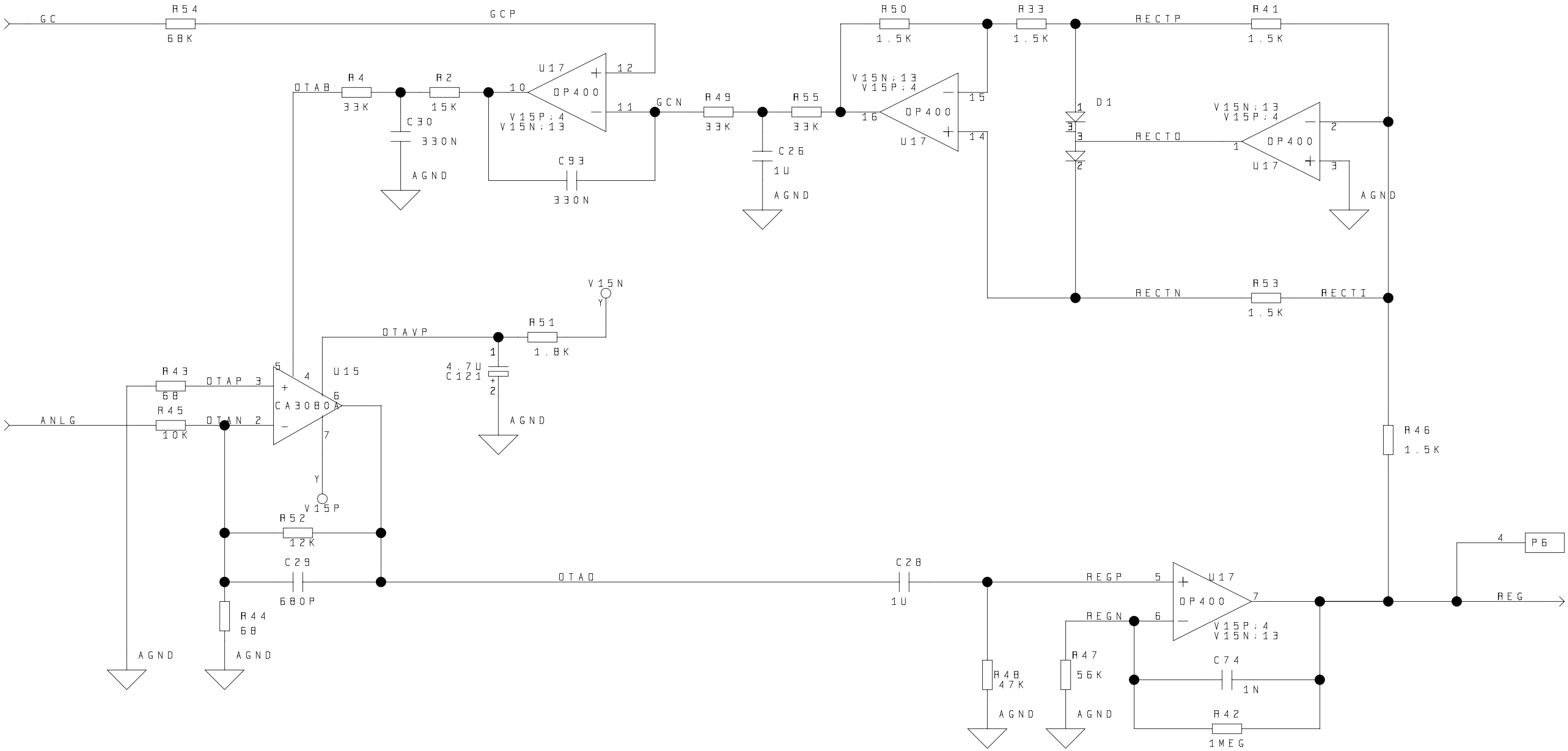

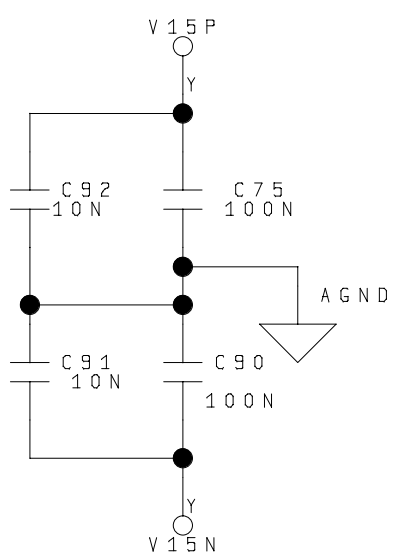

REF.NO.	ISSUE	DATE	SIGN
2837	7	13.11.96	ER
2701	6	10.04.96	ER
2498	5	29.09.95	ER
2403	4	03.07.95	ER
2259	3	16.03.95	ER
2205	2	08.02.95	ER

DESCRIPTION: CIRCUIT DIAGRAM

NAME: AGC_AMP2

MODULE: LF1223A

Normarc

Copyright and all modification rights reserved NAVIA AVIATION AS, NORWAY

DRAWN	10.10.94	ER
CHECKED	11-13-1996_12:26	
APPR.	10.10.94	JSA

#SCH.	#HDL	SIZE	SHEET
24		A3	10

DWG.NO.: 15472

VERSION: 7

PROJECT:

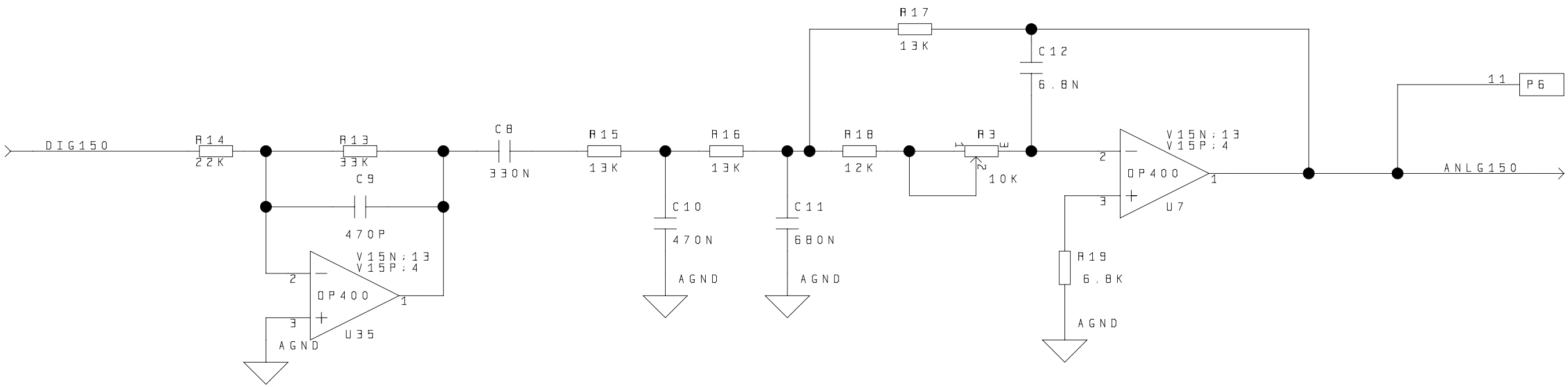

REF.NO.	ISSUE	DATE	SIGN
2837	7	13.11.96	ER
2701	6	10.04.96	ER
2498	5	29.09.95	ER
2403	4	03.07.95	ER
2259	3	16.03.95	ER
2205	2	08.02.95	ER

DESCRIPTION: CIRCUIT DIAGRAM

NAME: LPF_150

MODULE: LF1223A

Normarc

Copyright and all modification rights reserved NAVIA AVIATION AS, NORWAY

DRAWN	10.10.94	ER
CHECKED	11-13-1996_12:28	
APPR.	10.10.94	JSA

#SCH.	#HDL	SIZE	SHEET
24		A3	11

DWG.NO.	VERSION
15472	7

PROJECT:

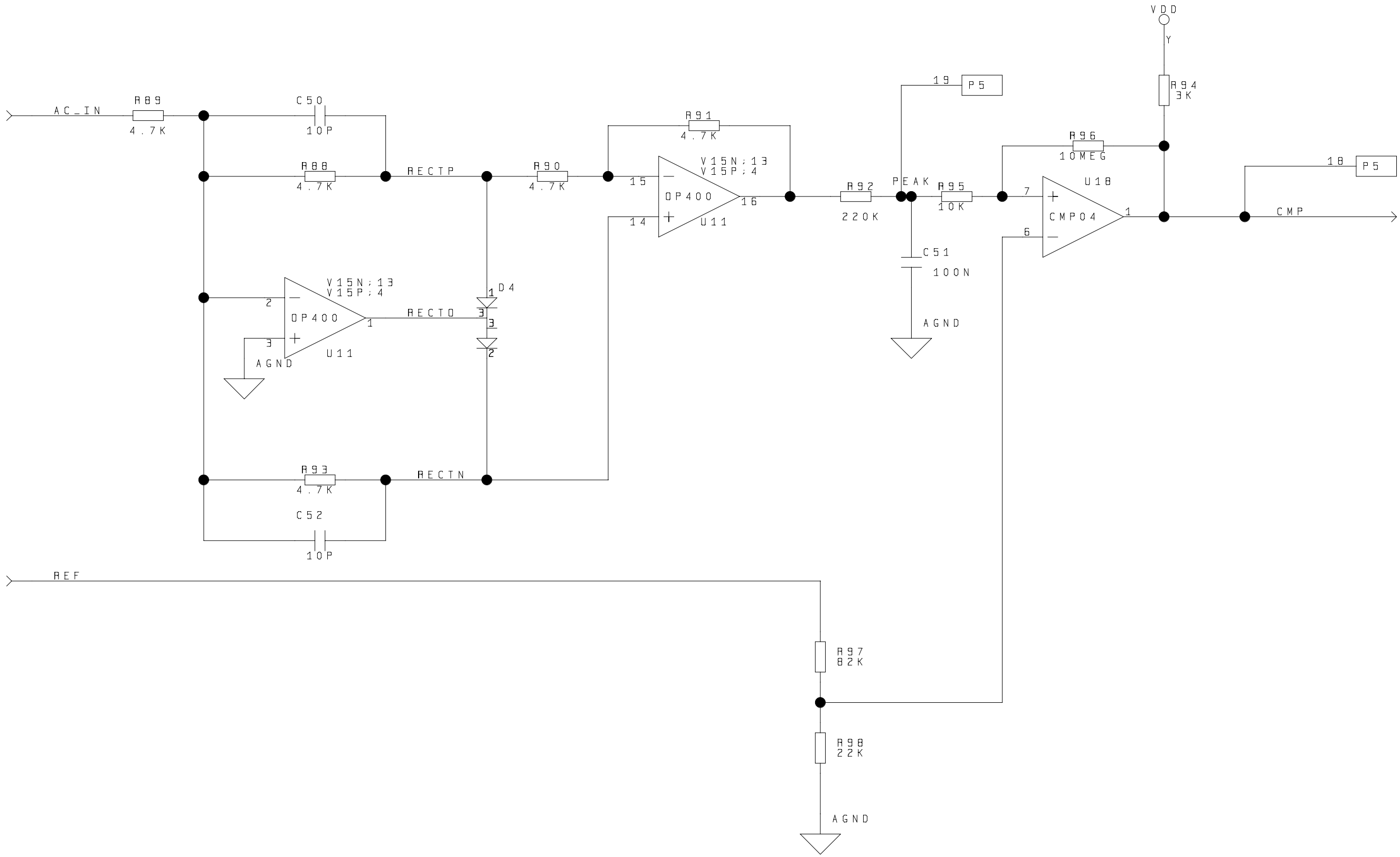

REF.NO.	ISSUE	DATE	SIGN
2837	7	13.11.96	ER
2701	6	10.04.96	ER
2498	5	29.09.95	ER
2403	4	03.07.95	ER
2259	3	16.03.95	ER
2205	2	08.02.95	ER

DESCRIPTION: CIRCUIT DIAGRAM

NAME: PEAK_VAL

MODULE: LF1223A

Normarc

Copyright and all modification rights reserved NAVIA AVIATION AS, NORWAY

DRAWN	10.10.94	ER
CHECKED	11-13-1996_12:30	
APPR.	10.10.94	JSA

#SCH.:	#HDL:	SIZE:	SHEET:
24		A3	12

DWG.NO.: 15472

VERSION: 7

PROJECT:

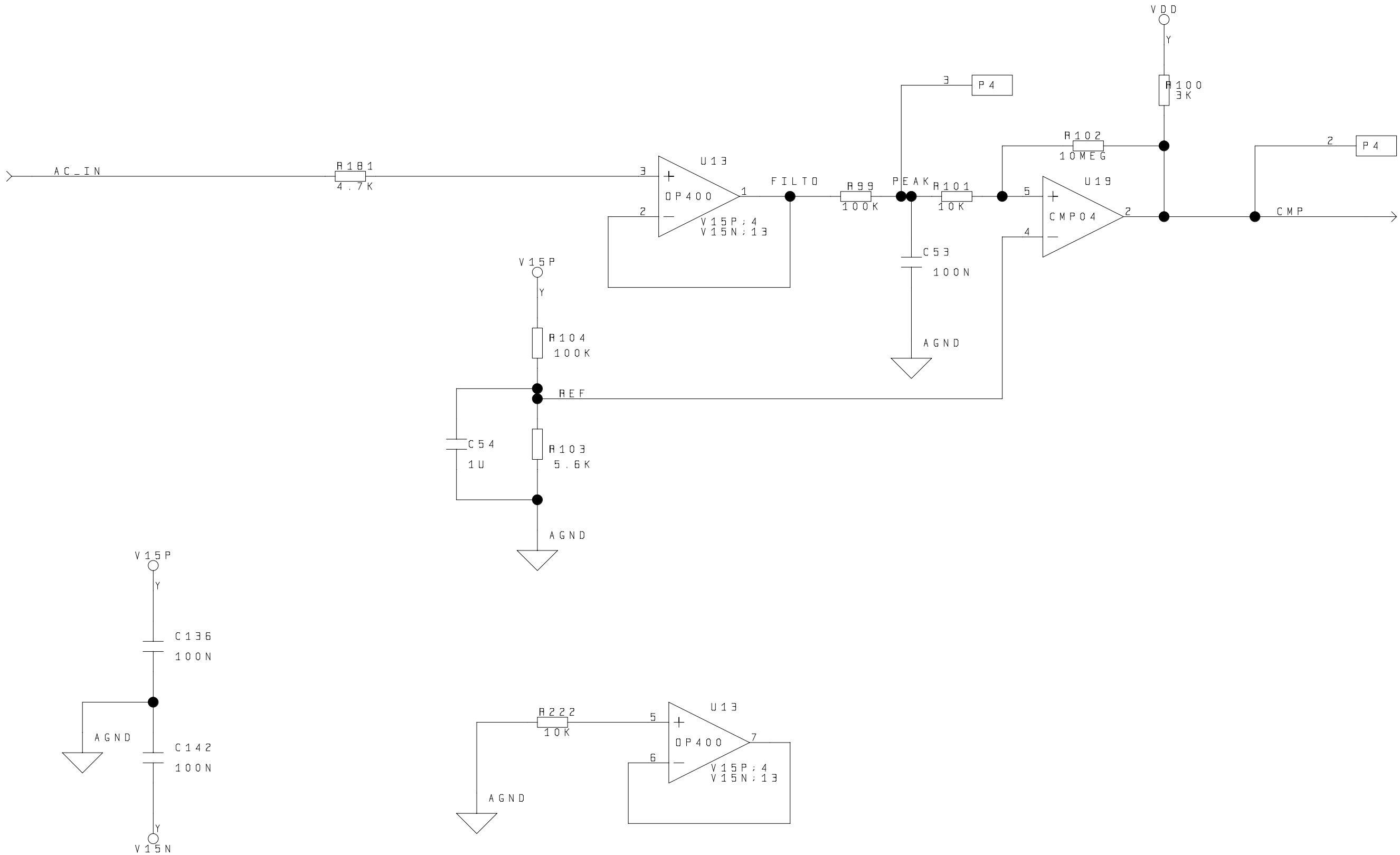

REF.NO.	ISSUE	DATE	SIGN
2837	7	13.11.96	ER
2701	6	10.04.96	ER
2498	5	29.09.95	ER
2403	4	03.07.95	ER
2259	3	16.03.95	ER
2205	2	08.02.95	ER

DESCRIPTION: CIRCUIT DIAGRAM

NAME: DC_VAL

MODULE: LF1223A

Normarc

Copyright and all modification rights reserved NAVIA AVIATION AS, NORWAY

DRAWN	10.10.94	ER
CHECKED	11-13-1996_12:32	
APPR.	10.10.94	JSA

#SCH.	#HDL	SIZE	SHEET
24		A3	13

DWG.NO.: 15472

VERSION: 7

PROJECT:

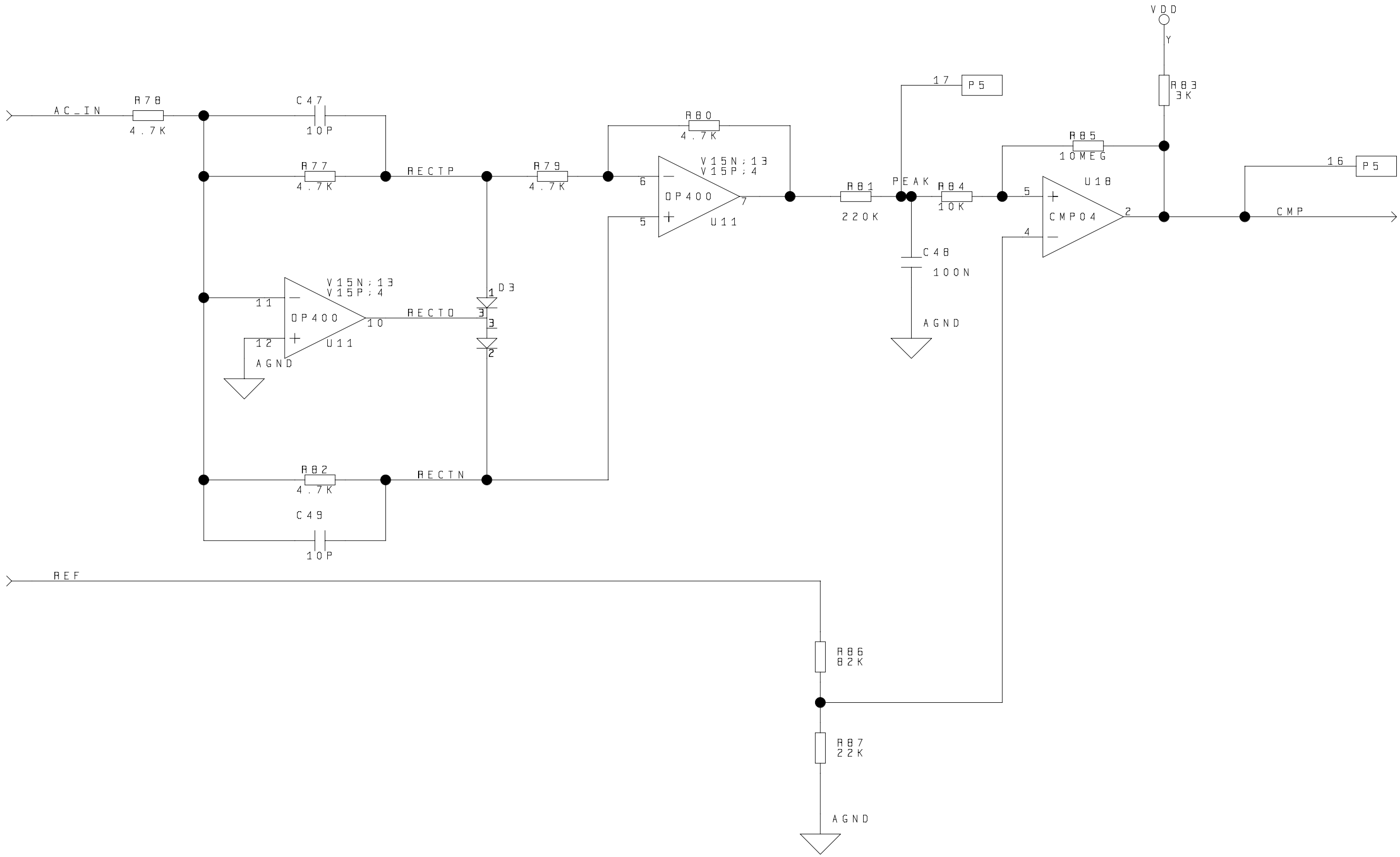

REF.NO.	ISSUE	DATE	SIGN
2837	7	13.11.96	ER
2701	6	10.04.96	ER
2498	5	29.09.95	ER
2403	4	03.07.95	ER
2259	3	16.03.95	ER
2205	2	08.02.95	ER

DESCRIPTION: CIRCUIT DIAGRAM

NAME: PEAKVAL2

MODULE: LF1223A

Normarc

Copyright and all modification rights reserved NAVIA AVIATION AS, NORWAY

DRAWN	10.10.94	ER
CHECKED	11-13-1996_12:33	
APPR.	10.10.94	JSA

#SCH.:	#HDL:	SIZE:	SHEET:
24		A3	14

DWG.NO.: 15472

VERSION: 7

PROJECT:

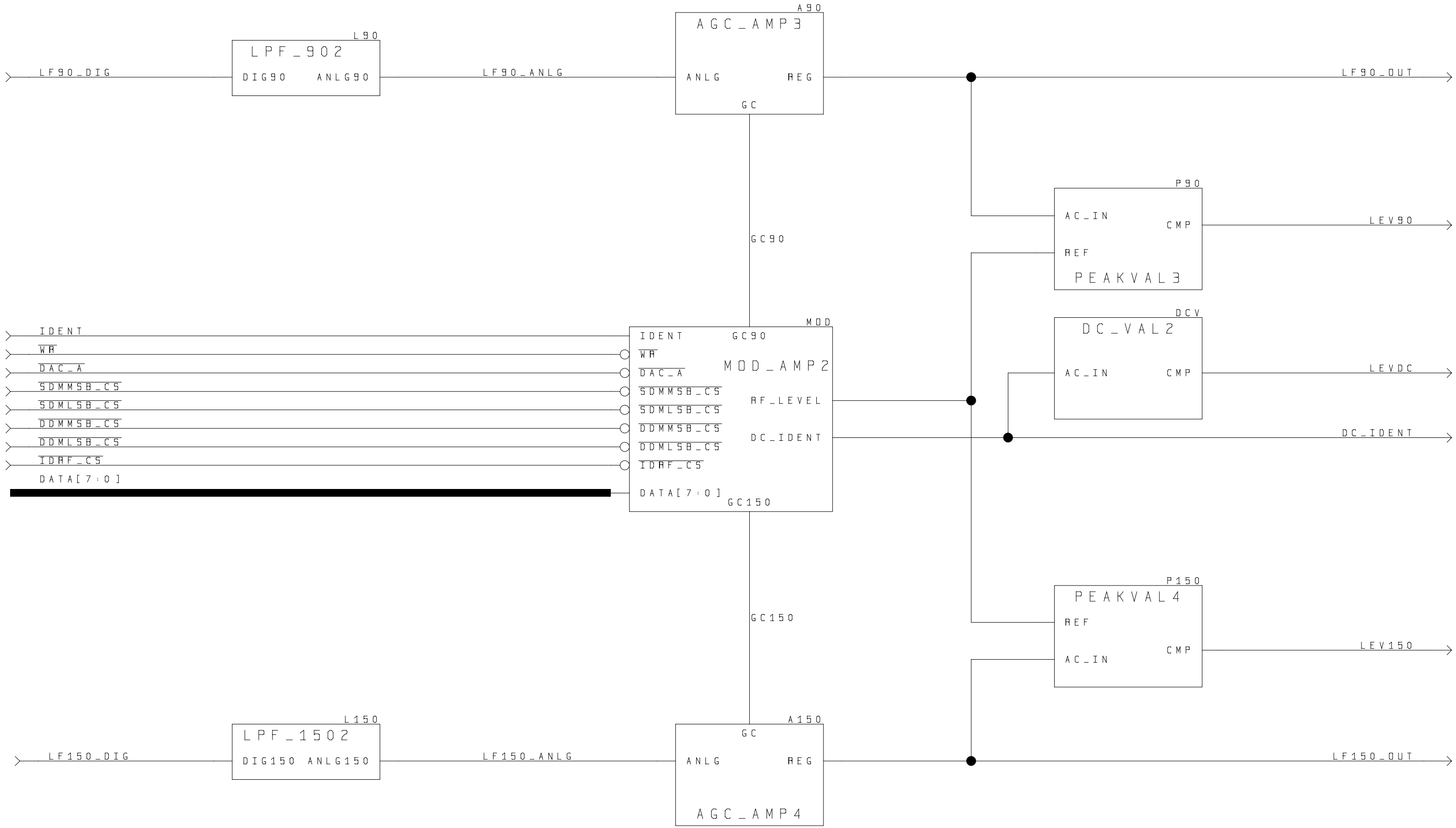

REF.NO.	ISSUE	DATE	SIGN
2837	7	13.11.96	ER
2701	6	10.04.96	ER
2498	5	29.09.95	ER
2403	4	03.07.95	ER
2259	3	16.03.95	ER
2205	2	08.02.95	ER

DESCRIPTION: CIRCUIT DIAGRAM

NAME: LF_MIX2

MODULE: LF1223A

Normarc

Copyright and all modification rights reserved NAVIA AVIATION AS, NORWAY

DRAWN	10.10.94	ER
CHECKED	11-13-1996_13:09	
APPR.	10.10.94	JSA

#SCH.	#HDL	SIZE	SHEET
24		A3	15

DWG.NO.: 15472

VERSION: 7

PROJECT:

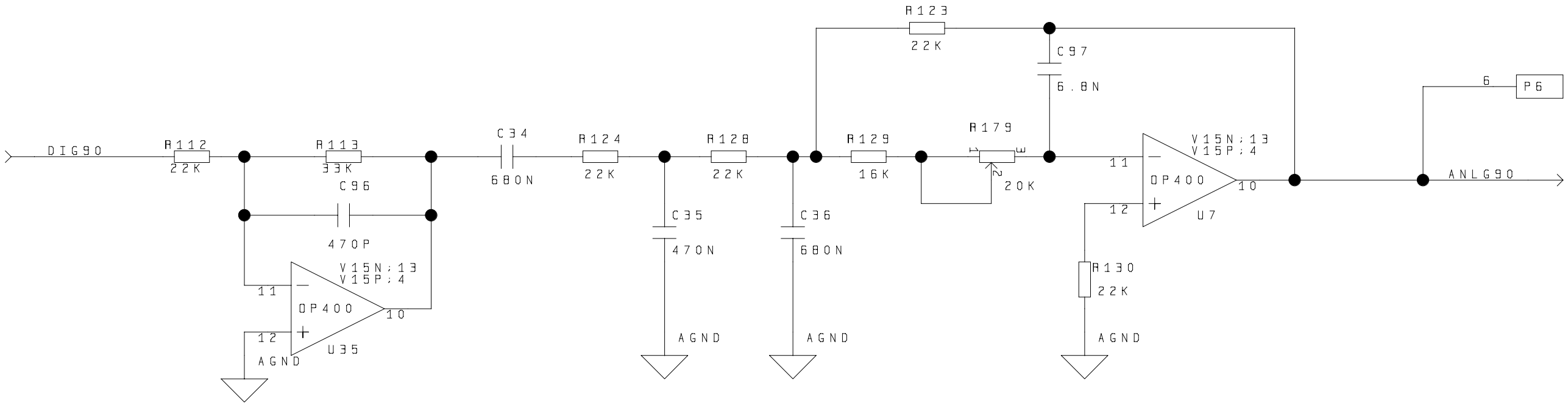

REF.NO.	ISSUE	DATE	SIGN
2837	7	13.11.96	ER
2701	6	10.04.96	ER
2498	5	29.09.95	ER
2403	4	03.07.95	ER
2259	3	16.03.95	ER
2205	2	08.02.95	ER

DESCRIPTION:
CIRCUIT DIAGRAM

NAME: LPF_902
MODULE: LF1223A

Normarc

Copyright and all modification rights reserved NAVIA AVIATION AS, NORWAY

DRAWN	10.10.94	ER
CHECKED	11-13-1996_12:40	
APPR.	10.10.94	JSA

#SCH.:	#HDL:	SIZE:	SHEET:
24		A3	16

DWG.NO.:	VERSION:
15472	7

PROJECT:

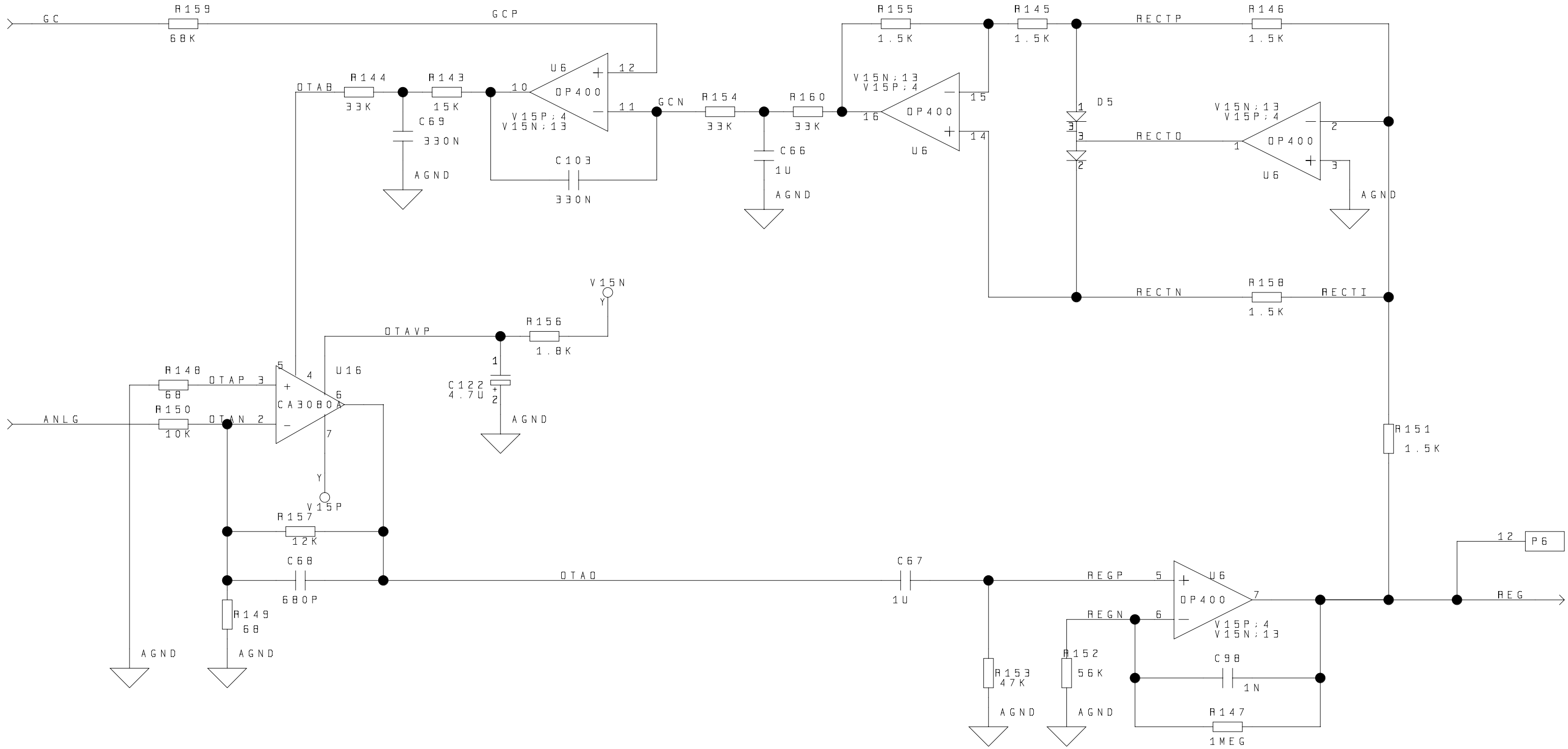

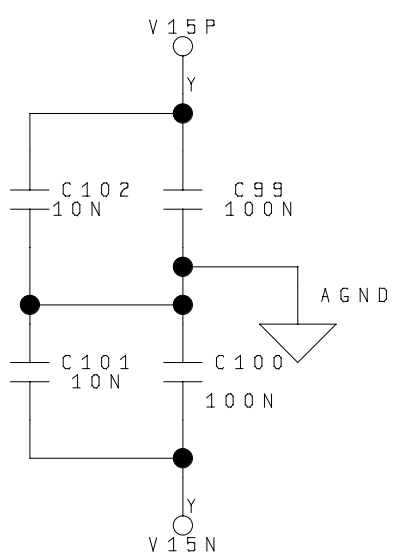

REF.NO.	ISSUE	DATE	SIGN
2837	7	13.11.96	ER
2701	6	10.04.96	ER
2498	5	29.09.95	ER
2403	4	03.07.95	ER
2259	3	16.03.95	ER
2205	2	08.02.95	ER

DESCRIPTION: CIRCUIT DIAGRAM

NAME: AGC_AMP3

MODULE: LF1223A

Normarc

Copyright and all modification rights reserved NAVIA AVIATION AS, NORWAY

DRAWN	10.10.94	ER
CHECKED	11-13-1996_12:55	
APPR.	10.10.94	JSA

#SCH.	#HDL	SIZE	SHEET
24		A3	17

DWG.NO.: 15472

VERSION: 7

PROJECT:

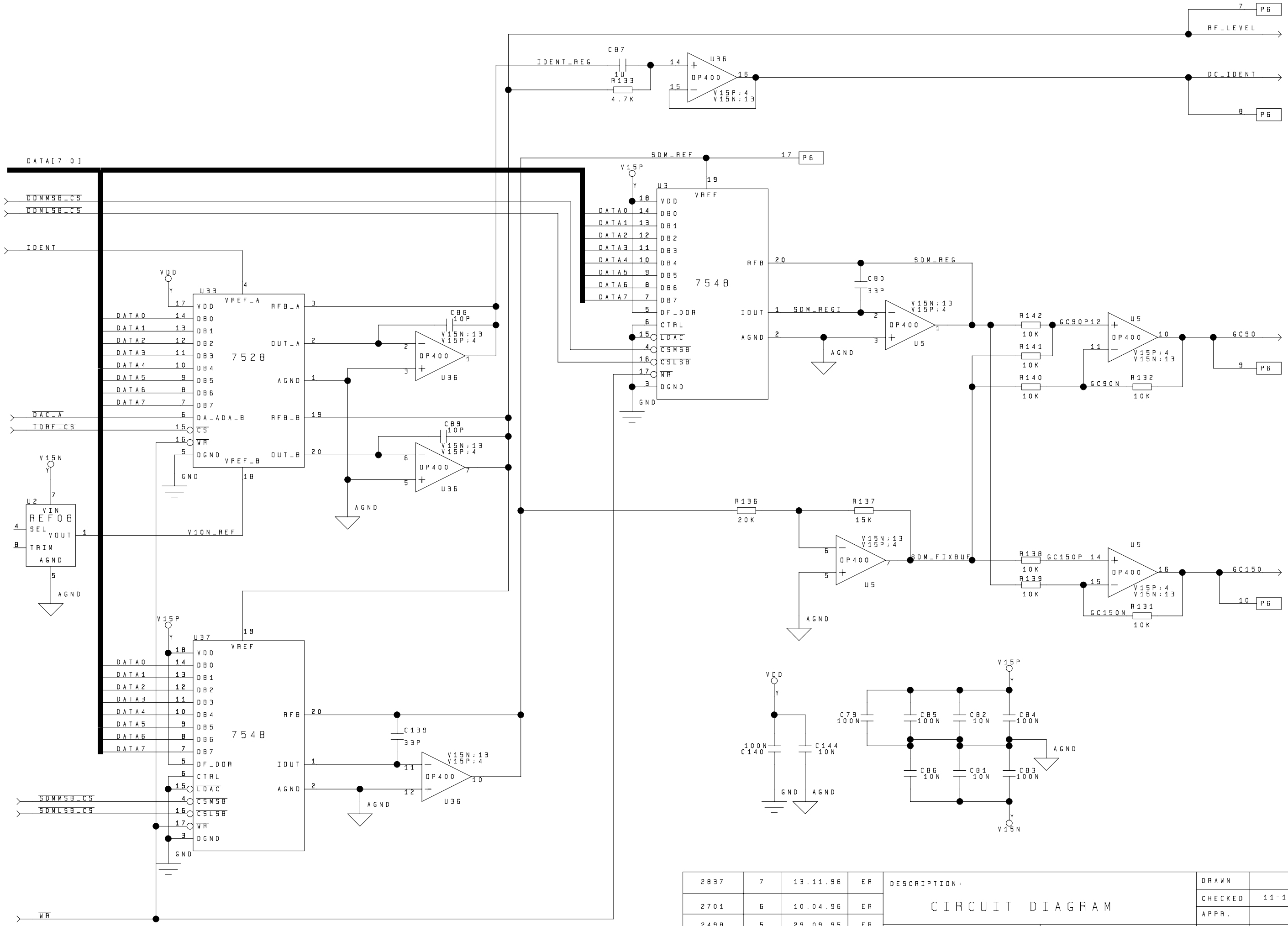

2837	7	13.11.96	ER	DESCRIPTION: CIRCUIT DIAGRAM	DRAWN	10.10.94		ER
2701	6	10.04.96	ER		CHECKED	11-13-1996_12:57		
2498	5	29.09.95	ER		APPR.	10.10.94		JSA
2403	4	03.07.95	ER	NAME: MOD_AMP2 / MODULE: LF1223A	#SCH.: 24	#HDL:	SIZE: A3	SHEET: 18
2259	3	16.03.95	ER	Normarc	DWG.NO.: 15472			VERSION: 7
2205	2	08.02.95	ER		PROJECT:			
REF.NO.	ISSUE	DATE	SIGN					

Copyright and all modification rights reserved NAVIA AVIATION AS, NORWAY

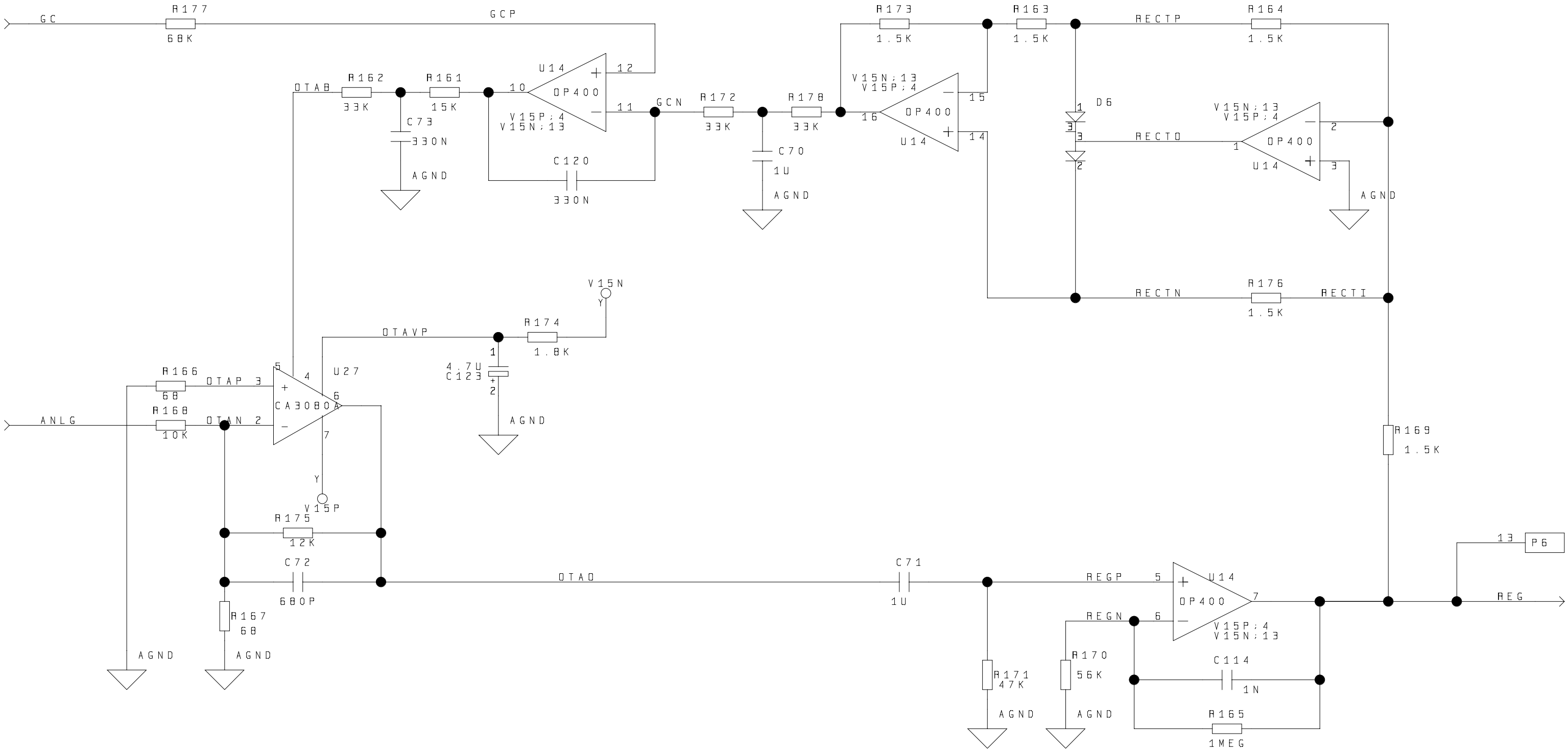

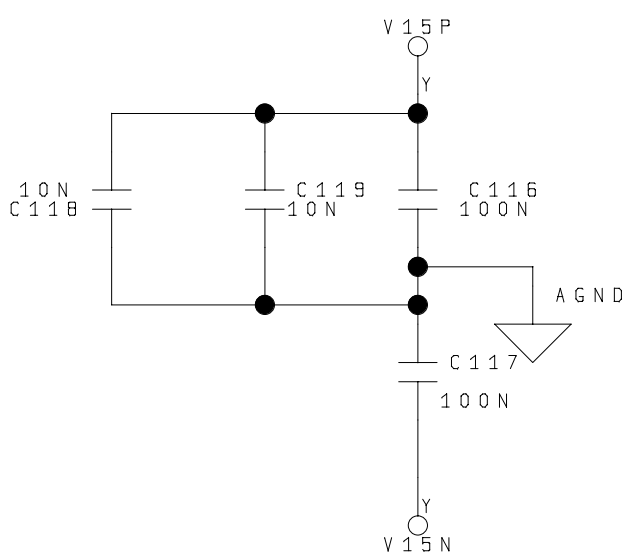

REF.NO.	ISSUE	DATE	SIGN
2837	7	13.11.96	ER
2701	6	10.04.96	ER
2498	5	29.09.95	ER
2403	4	03.07.95	ER
2259	3	16.03.95	ER
2205	2	08.02.95	ER

DESCRIPTION: CIRCUIT DIAGRAM

NAME: AGC_AMP4

MODULE: LF1223A

Normarc

Copyright and all modification rights reserved NAVIA AVIATION AS, NORWAY

DRAWN	10.10.94	ER
CHECKED	11-13-1996_12:59	
APPR.	10.10.94	JSA

#SCH.	#HDL	SIZE	SHEET
24		A3	19

DWG.NO.: 15472

VERSION: 7

PROJECT:

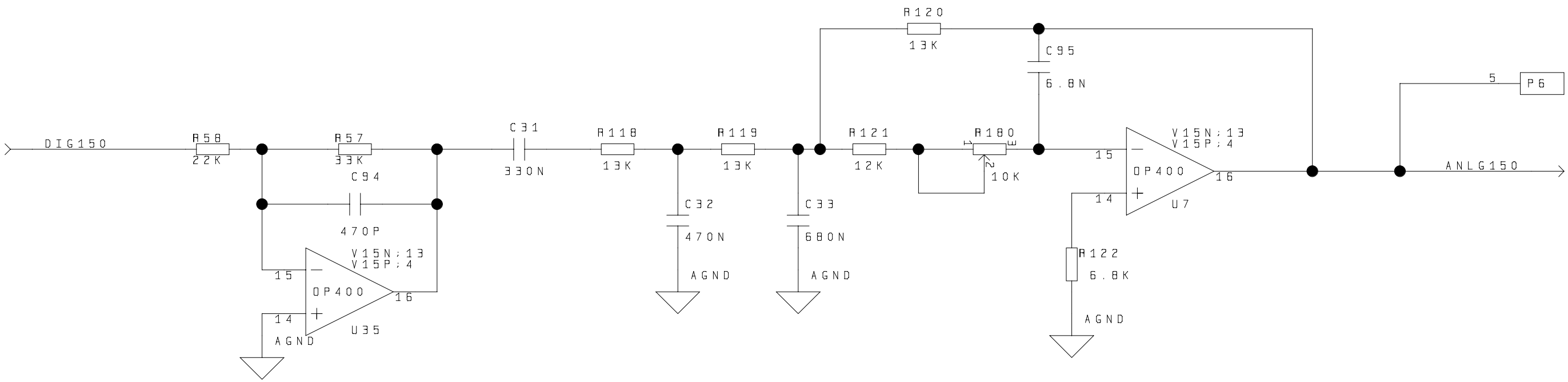

REF.NO.	ISSUE	DATE	SIGN
2837	7	13.11.96	ER
2701	6	10.04.96	ER
2498	5	29.09.95	ER
2403	4	03.07.95	ER
2259	3	16.03.95	ER
2205	2	08.02.95	ER

DESCRIPTION:
CIRCUIT DIAGRAM

NAME: LPF_1502
MODULE: LF1223A

Normarc

Copyright and all modification rights reserved NAVIA AVIATION AS, NORWAY

DRAWN	10.10.94	ER
CHECKED	11-13-1996_13:04	
APPR.	10.10.94	JSA

#SCH.	#HDL	SIZE	SHEET
24		A3	20

DWG.NO.	VERSION
15472	7

PROJECT:

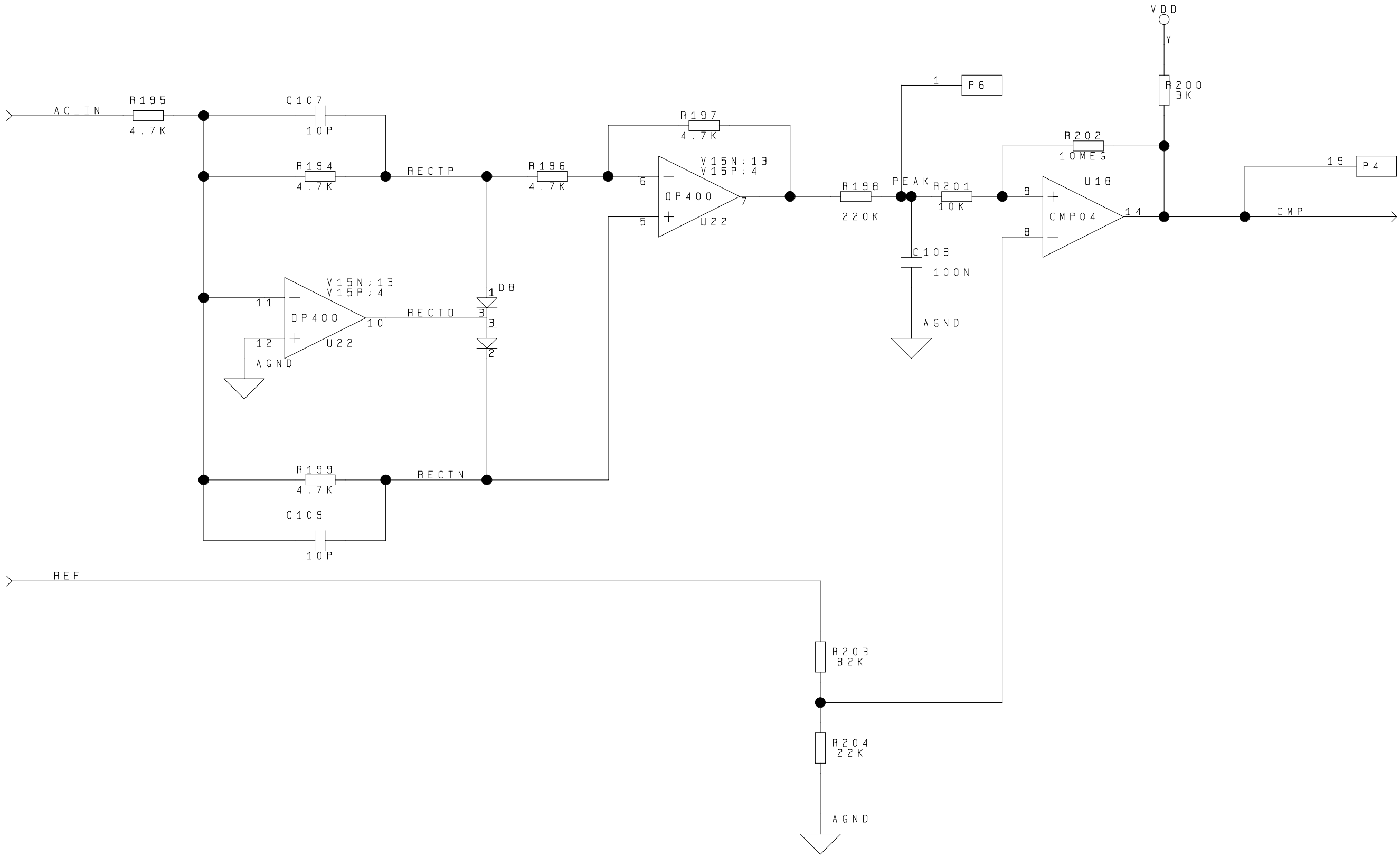

REF.NO.	ISSUE	DATE	SIGN
2837	7	13.11.96	ER
2701	6	10.04.96	ER
2498	5	29.09.95	ER
2403	4	03.07.95	ER
2259	3	16.03.95	ER
2205	2	08.02.95	ER

DESCRIPTION: CIRCUIT DIAGRAM

NAME: PEAKVAL3

MODULE: LF1223A

Normarc

Copyright and all modification rights reserved NAVIA AVIATION AS, NORWAY

DRAWN	10.10.94	ER
CHECKED	11-13-1996_13:06	
APPR.	10.10.94	JSA

#SCH.:	#HDL:	SIZE:	SHEET:
24		A3	21

DWG.NO.: 15472

VERSION: 7

PROJECT:

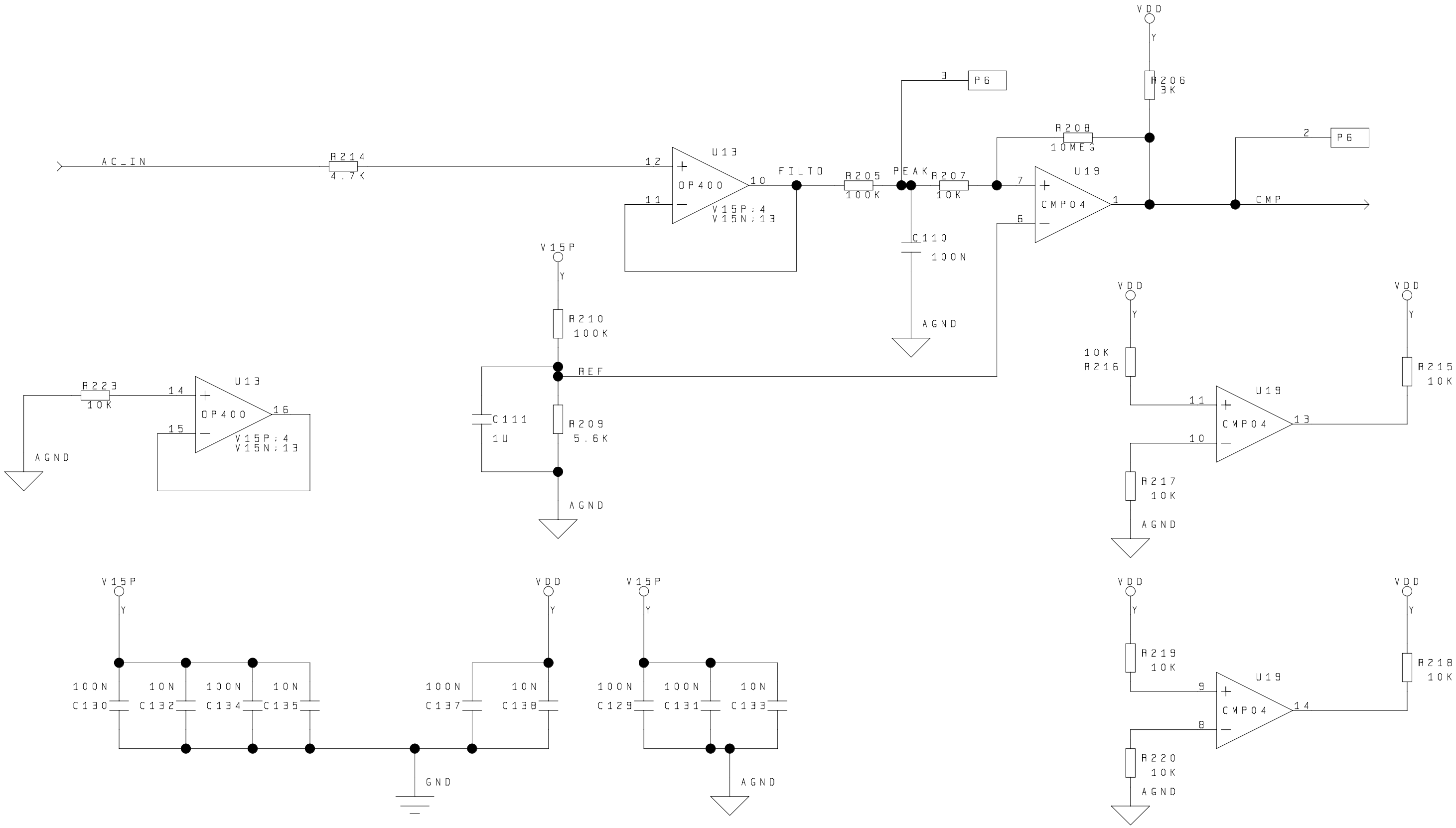

2837	7	13.11.96	ER	DESCRIPTION: CIRCUIT DIAGRAM	DRAWN	10.10.94		ER
2701	6	10.04.96	ER		CHECKED	11-13-1996_13:07		
2498	5	29.09.95	ER		APPR.	10.10.94		JSA
2403	4	03.07.95	ER	NAME: DC_VAL2 / MODULE: LF1223A	#SCH.: 24	#HDL:	SIZE: A3	SHEET: 22
2259	3	16.03.95	ER	Normarc	DWG.NO.: 15472			VERSION: 7
2205	2	08.02.95	ER		PROJECT:			
REF.NO.	ISSUE	DATE	SIGN					

Copyright and all modification rights reserved NAVIA AVIATION AS, NORWAY

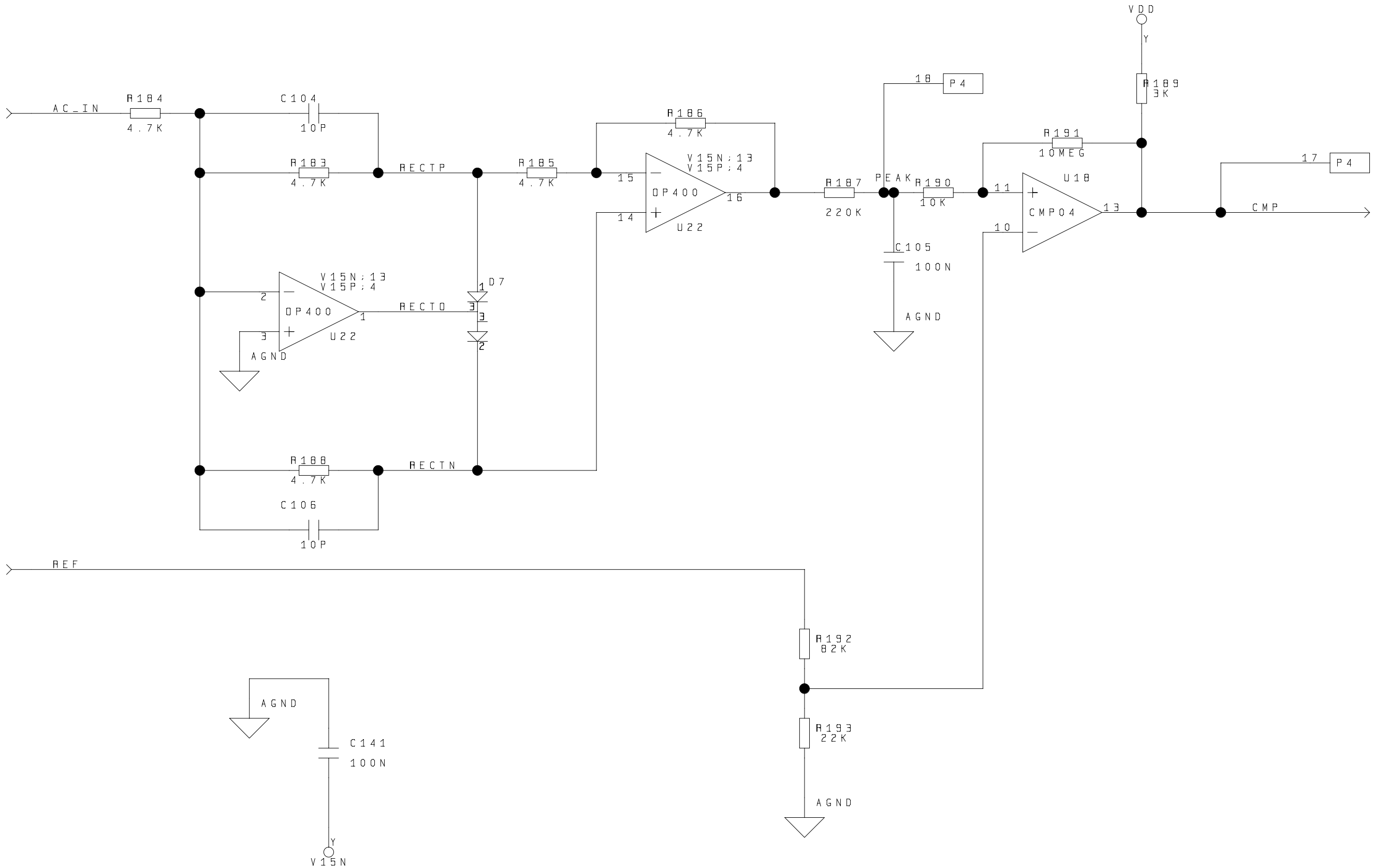

REF.NO.	ISSUE	DATE	SIGN
2837	7	13.11.96	ER
2701	6	10.04.96	ER
2498	5	29.09.95	ER
2403	4	03.07.95	ER
2259	3	16.03.95	ER
2205	2	08.02.95	ER

DESCRIPTION: CIRCUIT DIAGRAM

NAME: PEAKVAL4

MODULE: LF1223A

Normarc

Copyright and all modification rights reserved NAVIA AVIATION AS, NORWAY

DRAWN	10.10.94	ER
CHECKED	11-13-1996_13:08	
APPR.	10.10.94	JSA

#SCH.:	#HDL:	SIZE:	SHEET:
24		A3	23

DWG.NO.: 15472

VERSION: 7

PROJECT:

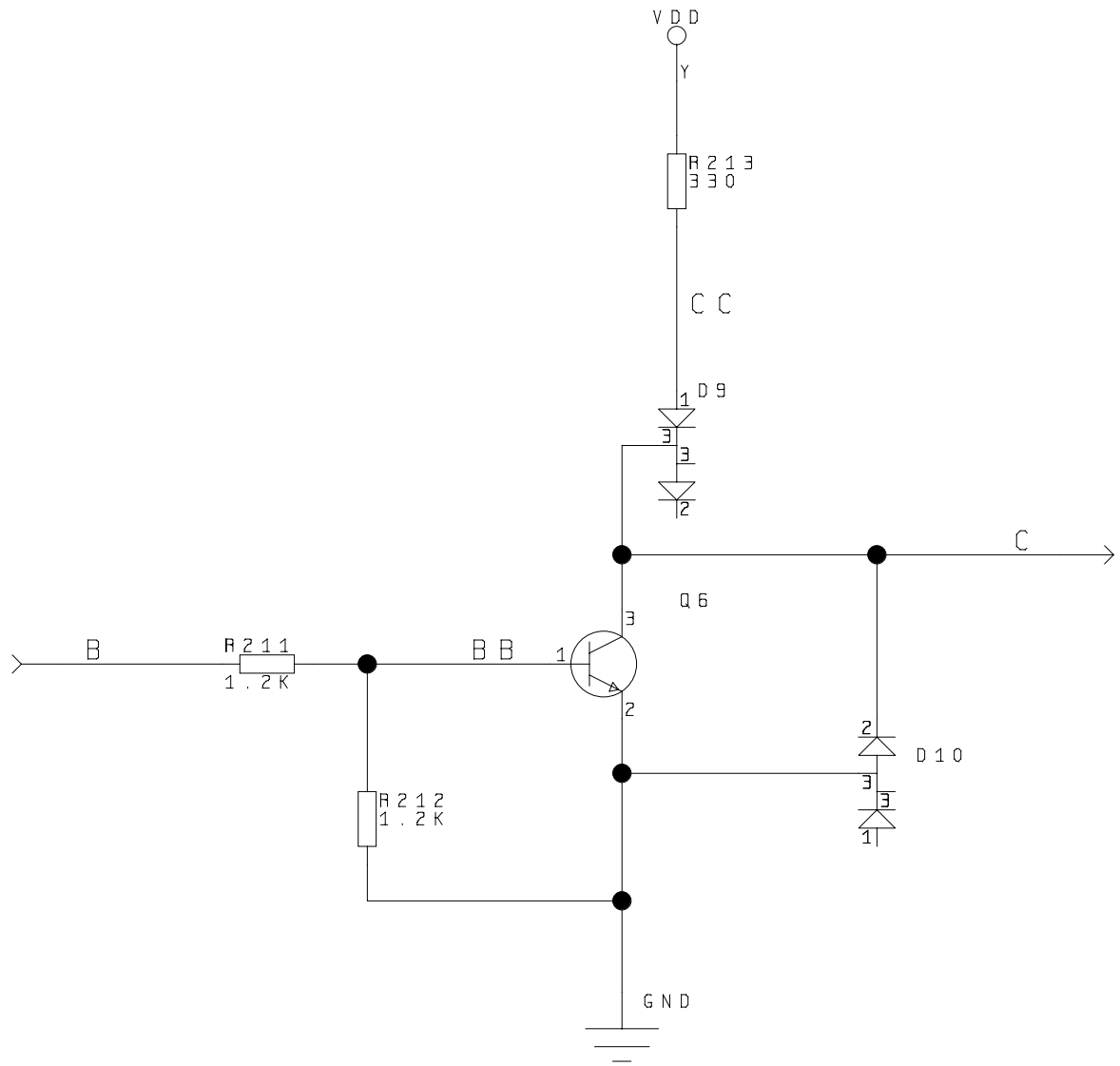

REF.NO.	ISSUE	DATE	SIGN
2837	7	13.11.96	ER
2701	6	10.04.96	ER
2498	5	29.09.95	ER
2403	4	03.07.95	ER
2259	3	16.03.95	ER
2205	2	08.02.95	ER

DESCRIPTION: CIRCUIT DIAGRAM

NAME: OPENCOLL

MODULE: LF1223A

Normarc

Copyright and all modification rights reserved NAVIA AVIATION AS, NORWAY

DRAWN	10.10.94	ER
CHECKED	11-13-1996_13:11	
APPR.	10.10.94	JSA

#SCH.	#HDL	SIZE	SHEET
24		A3	24

DWG.NO.: 15472

VERSION: 7

PROJECT:

1.2 Photos

©1999 Navia Aviation AS

NORMARC
LF1223

2 OS1221A RF Oscillator

2.1 Circuit Diagrams

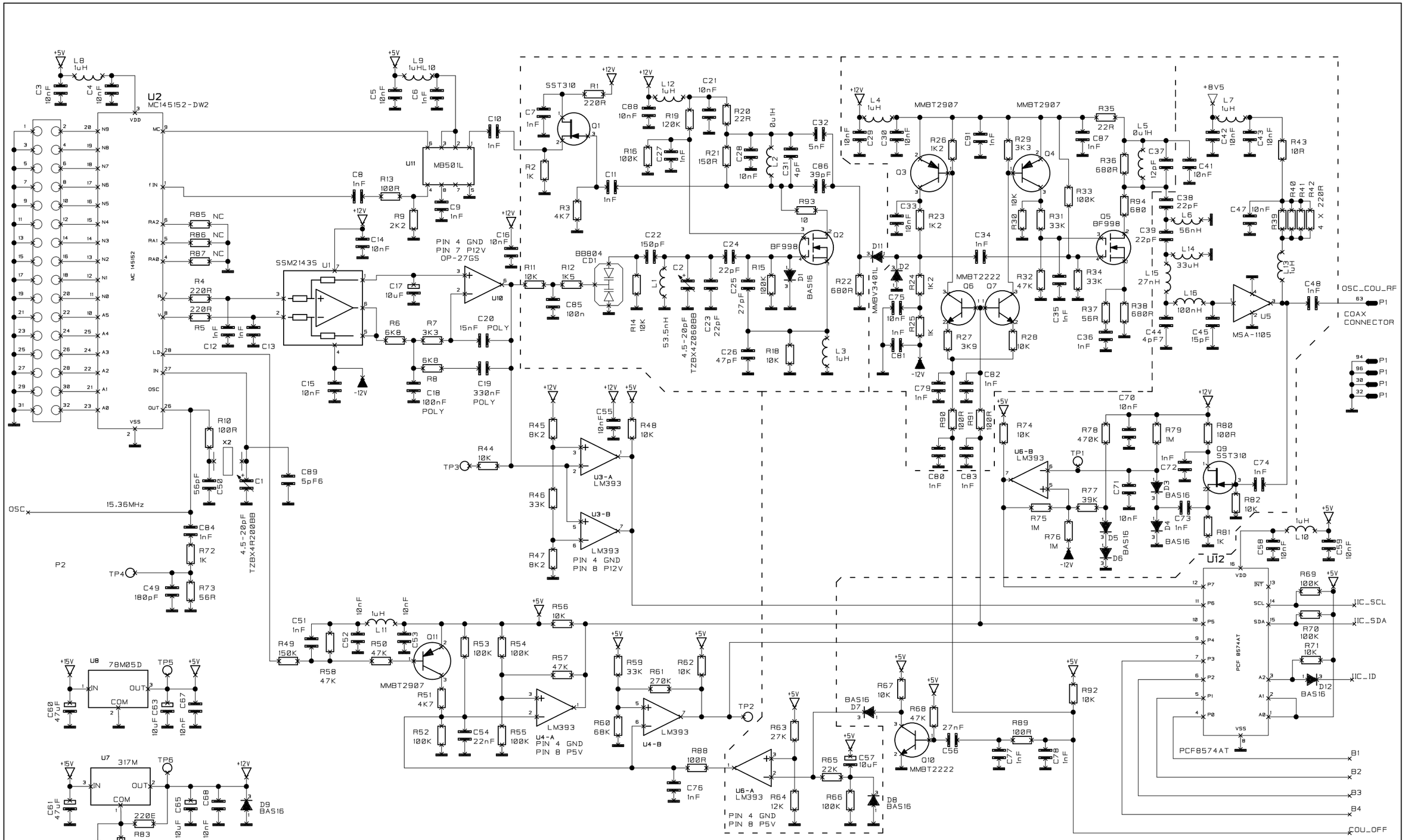

REF.NO.	ISSUE	DATE	SIGN
3537	8	240899	TBj
3504	7	230399	TBj
3272	6	260598	TBj
2971	5	130597	TBj
2524	4	210396	TBj
2504	3	061095	TBj

TITLE: CIRCUIT DIAGRAM
Page 1 of 2

SUBJECT: OS1221 A

NORMARC A/S

SCALE	DRAWN	30.11.94 TBj
	CHECKED	
	APPR.	9.1.95 JSa
SUP FOR:	SUP BY:	
DWG.NO.: 15148A3		8
FILENAME :	CADSTAR/15148A31.CSD	

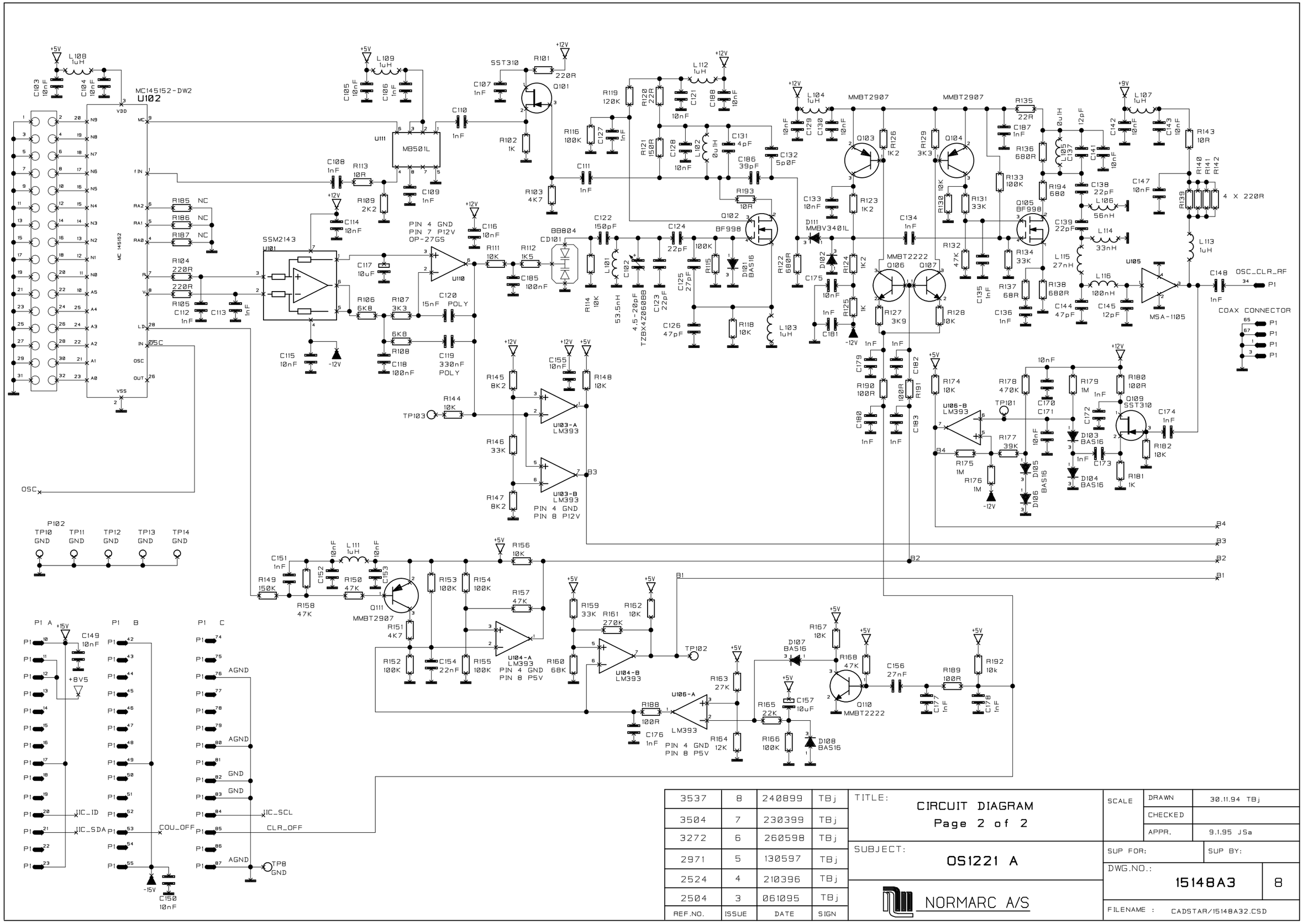

3537	8	240899	TBj	TITLE: CIRCUIT DIAGRAM Page 2 of 2	SCALE	DRAWN 30.11.94 TBj
3504	7	230399	TBj			CHECKED
3272	6	260598	TBj			APPR. 9.1.95 JSa
2971	5	130597	TBj	SUBJECT: OS1221 A	SUP FOR:	SUP BY:
2524	4	210396	TBj		DWG.NO.: 15148A3	8
2504	3	061095	TBj	NORMARC A/S		
REF.NO.	ISSUE	DATE	SIGN		FILENAME : CADSTAR/15148A32.CSD	

2.2 Component Location

 ©1999 Navia Aviation AS

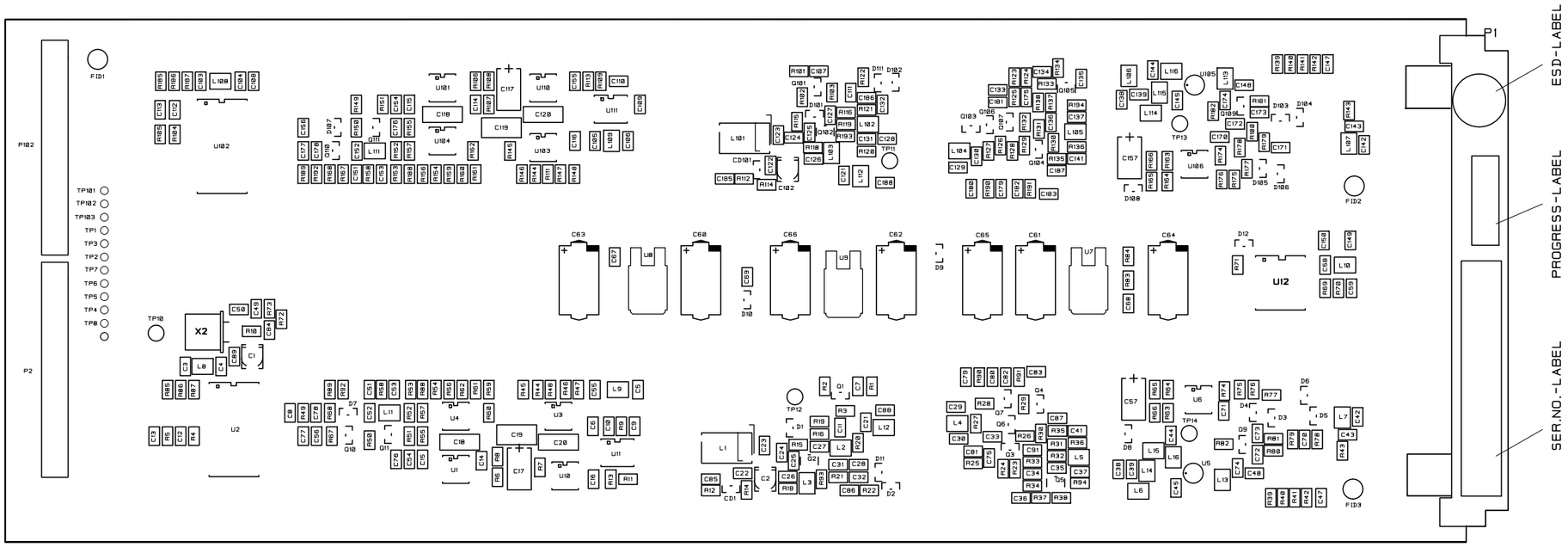

				TITLE: COMPONENT LOCATION SHEET NO. 1 OF 1	SCALE 1:1	DRAWN	21.12.95. TBJ
						CHECKED	
3537	5	240299	TBJ	SUBJECT: OS 1221A/B		APPR.	21.12.95. JSA
3440	4	240299	PLI		SUP FOR:	SUP BY:	
3272	3	280598	TBJ	NORMARC	DWG.NO.: 16453A3		ISSUE 5
2971	2	130597	PLI				
REF.NO.	ISSUE	DATE	SIGN	Copyright and all modification right reserved NAVIA AVIATION AS, NORWAY	FILENAME : 16453A3.SPL		

2.3 Photos

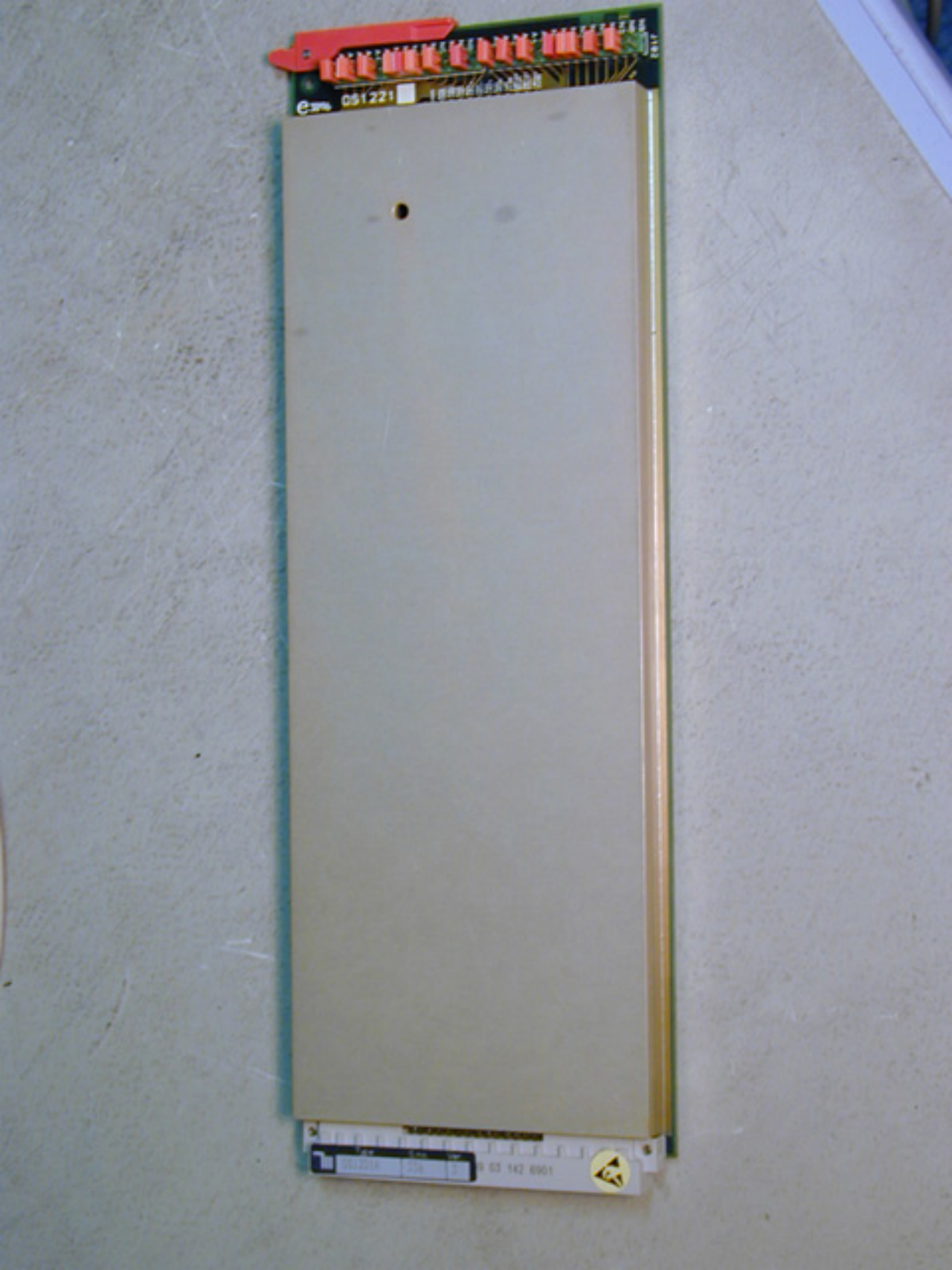

3 LPA1230A POWER AMPLIFIER

3.1 Photos

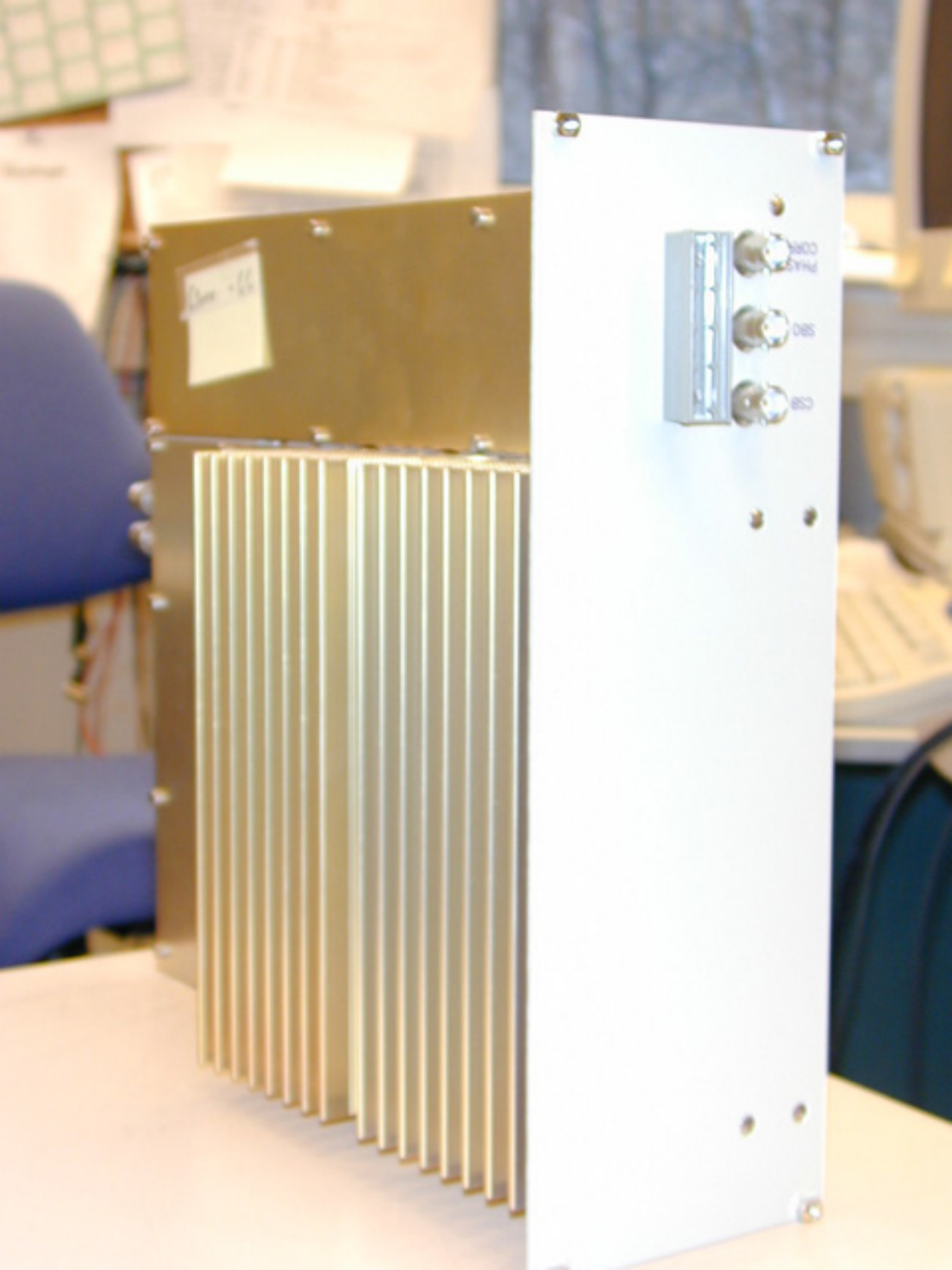

G1000 - GC

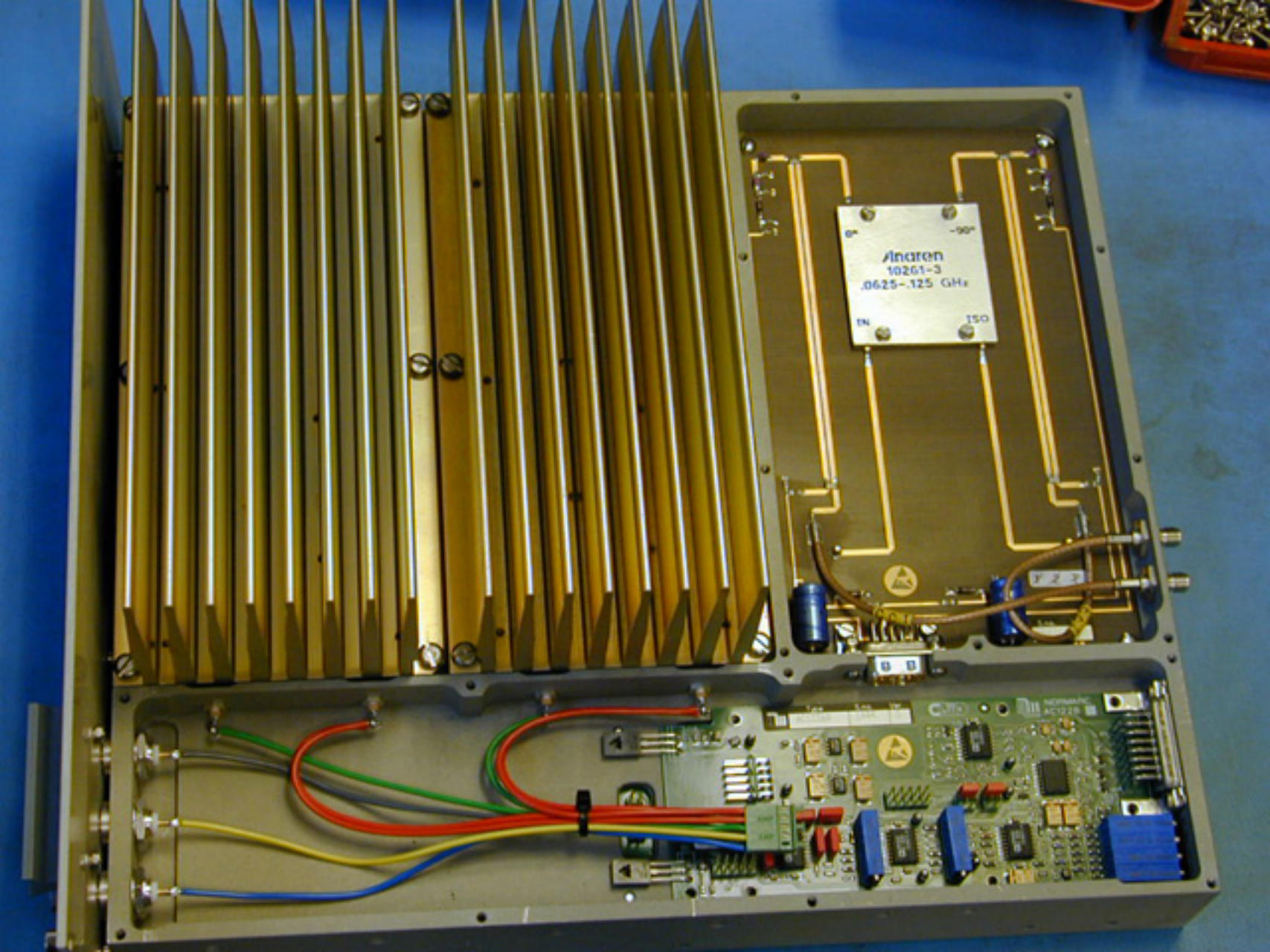
Anaren
10261-3
.0625-.125 GHz
0°
-90°
IN
ISO

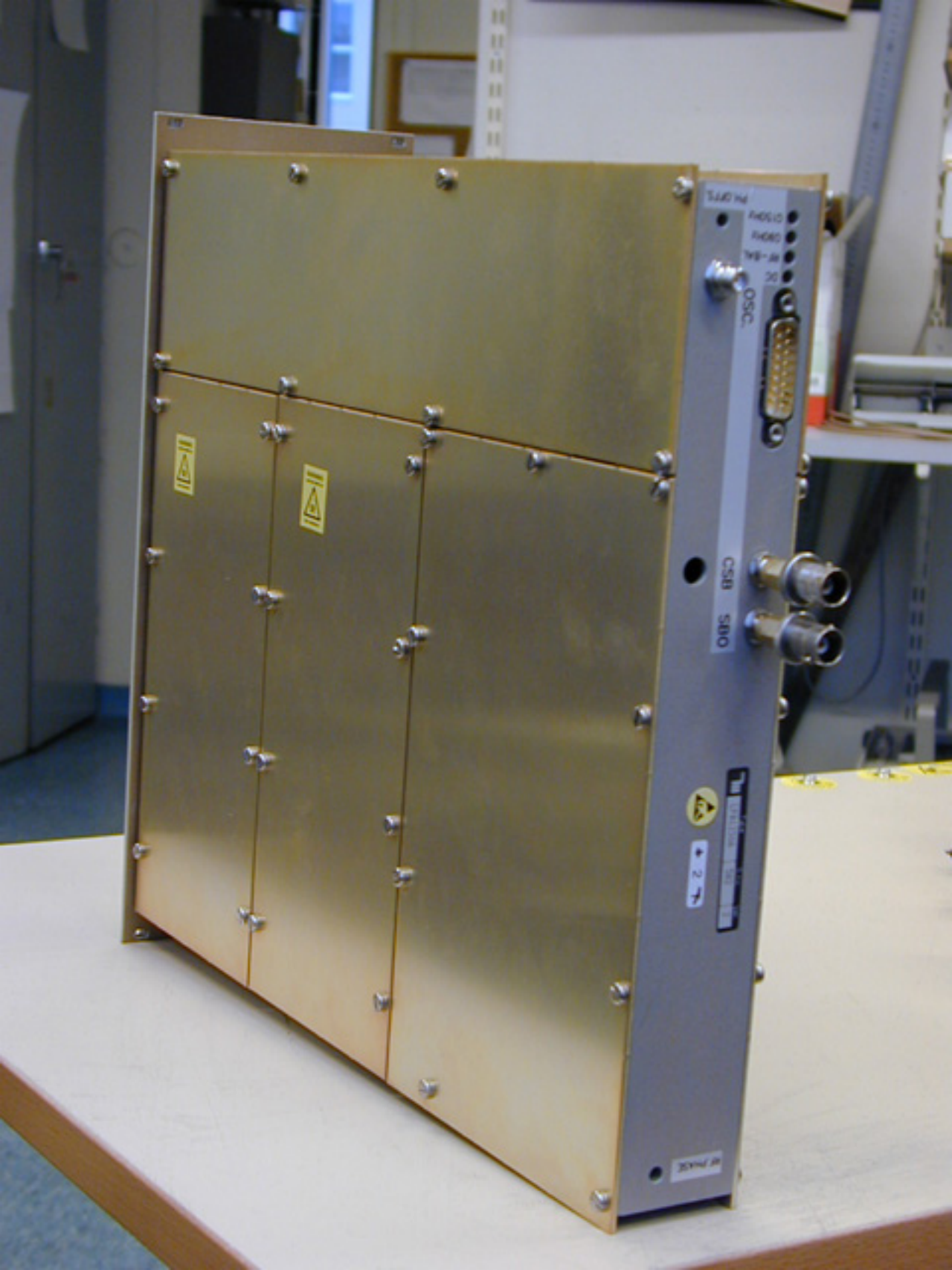
OSC
CSB
SBO

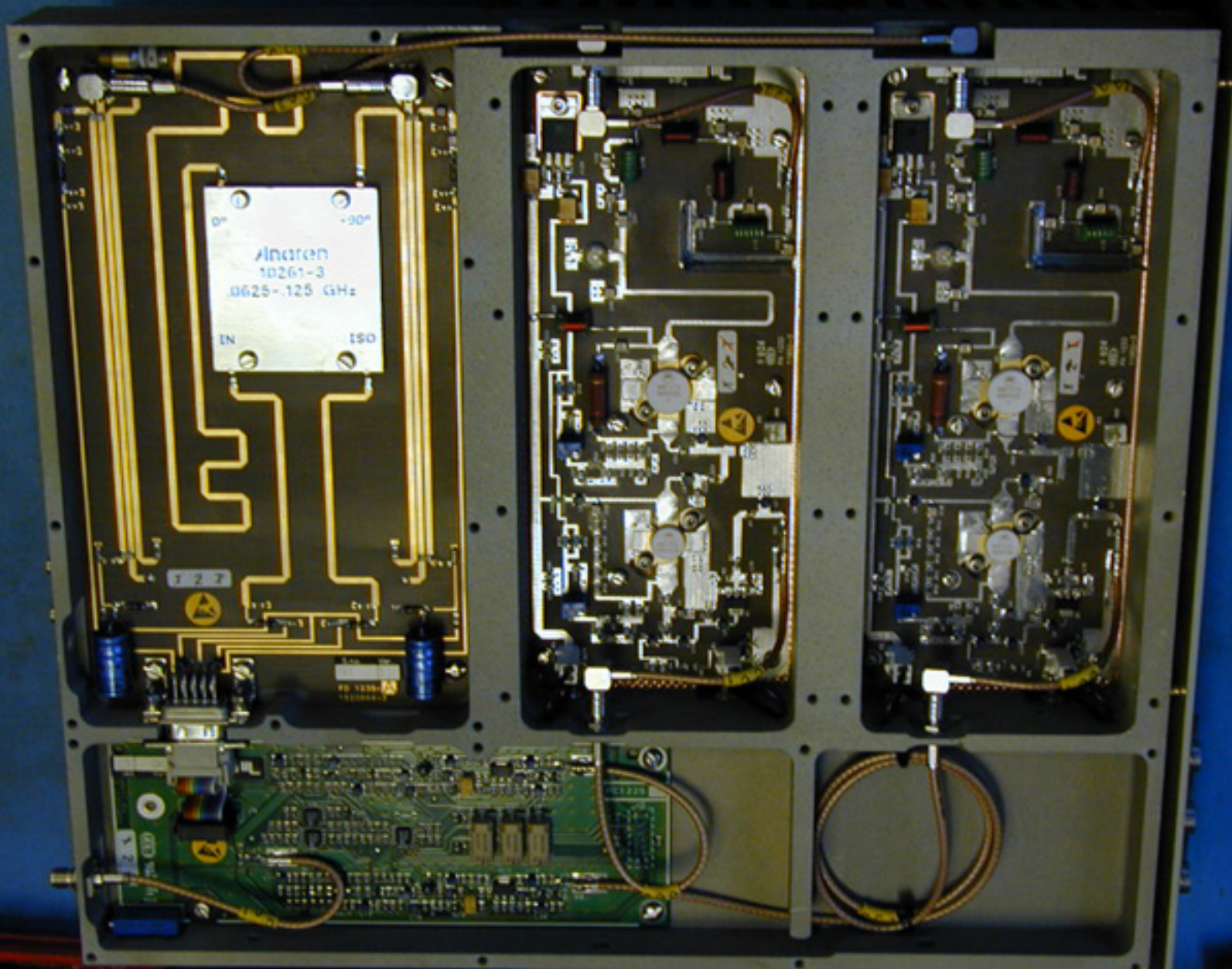
0°
-90°
Anaren
10261-3
.0625-.125 GHz
IN
ISO

4 PA1233A Power Amplifier

4.1 Schematic Diagrams

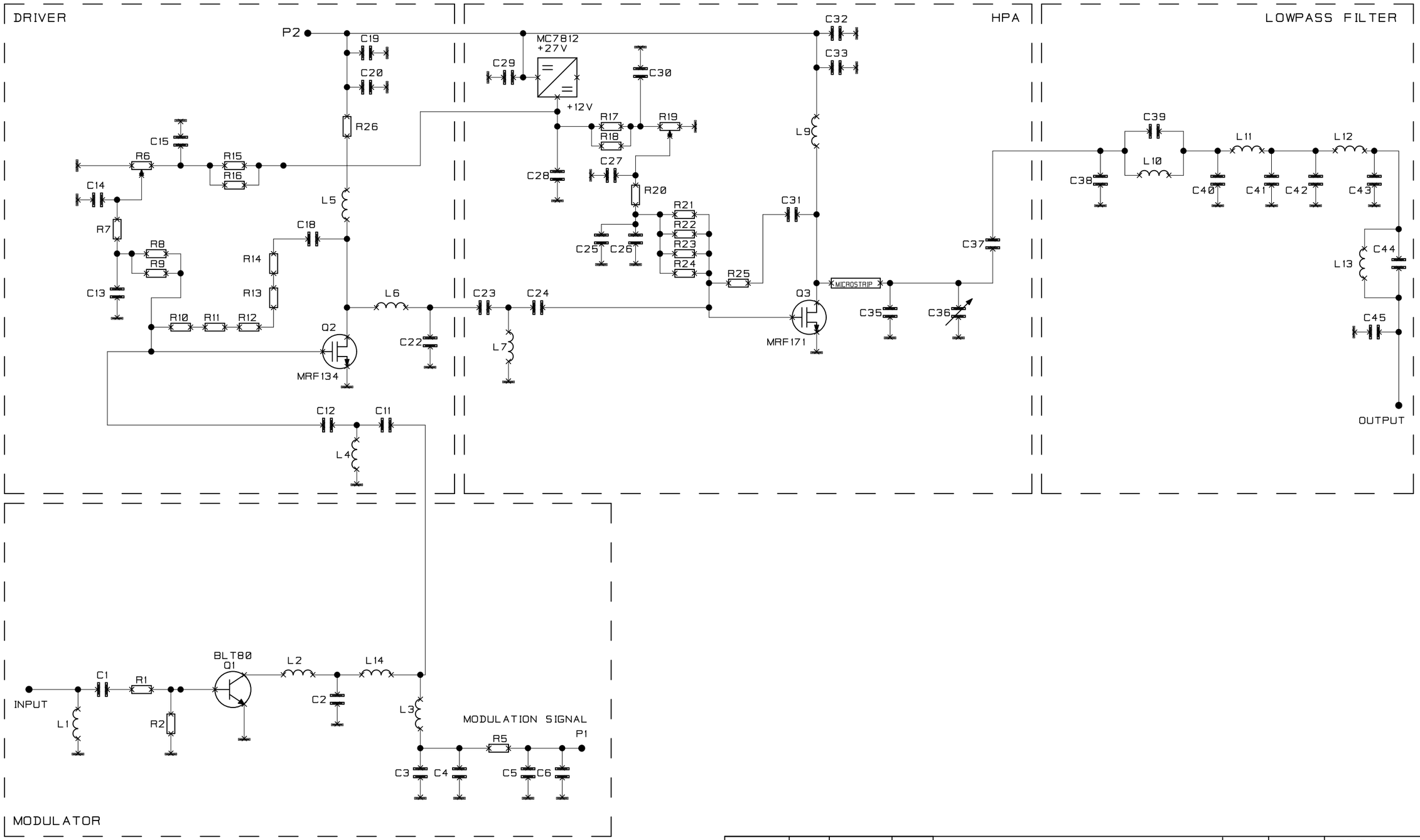

2351	2	080695	TBj
REF.NO.	ISSUE	DATE	SIGN

TITLE:
CIRCUIT DIAGRAM
SHEET NO. 1 OF 1

SUBJECT:
PA 1233A

NORMARC A/S

SCALE	DRAWN	20.12.94. PL.
	CHECKED	
	APPR.	21.12.94 JSa
SUP FOR:	SUP BY:	
DWG.NO.: 15577A3		ISSUE 2
FILENAME : CSTAR\CSD\15577A3		

4.2 Parts List

 ©1999 Navia Aviation AS

Product: 18632 Rev. 4 PA 1233A POWER AMPLIFIER Issue: 4 Change Order: 3479 Appr.: A/S. Date: 24.2.99

Tot.Quant.	Pos.	Part no.	Component Manu. Description	Drwg.no. Rev.	Value/Dim. Ratings	Tol. Function	Quant./Pos.
1 PCS		13298	LABEL ESD TYPE 52404	-			1 PCS
1 PCS		18633	PA 1233A POWER AMPLIFIER PL	18633/8 6			1 PCS
1 PCS		18634	PA 1233A POWER AMPLIFIER MPL	- 8			1 PCS
1 PCS		18635	PA 1233A POWER AMPLIFIER CPL	- 3			1 PCS
1 PCS	C11	19833	CAP.SMD PH 0805C330J50	-	33P 50V	5%	1 PCS
1 PCS	C12	19842	CAP.SMD PH 0805C151J50	-	150P 50V	5%	1 PCS
1 PCS	C23	10207	CAP.CERAMIC ATC 100A560JP150DR	-	56p 150V	0.05	1 PCS
1 PCS	C24	10197	CAP.CERAMIC ATC 100A101JP150DR	-	100p 150V	0.05	1 PCS
1 PCS	Q02	11296	TRANSISTOR MOT MRF 134	-	5W		1 PCS
1 PCS	Q03	20375	TRANSISTOR MOT MRF 173	-	2-200MHZ 80W	N CH MOSFET RF	1 PCS
1 PCS	U01	11510	IC MOT MCT7812CT / MC7812	-			1 PCS

Product: 18633 Rev.6 PA 1233A POWER AMPLIFIER PL Issue: 9 Change Order: 3489 Appr.: HSA Date: 100399

Tot.Quant.	Pos.	Part no.	Component Manu. Description	Drwg.no. Rev.	Value/Dim. Ratings	Tol. Function	Quant./Pos.
1 PCS		11952	PCB PA1233 -	11952/3 3		PA1233A	1 PCS
1 PCS		13231	LABEL SER.NO. -	13344A4 1			1 PCS
1 PCS		13298	LABEL ESD TYPE 52404	-			1 PCS
1 PCS		20325	LABEL PROGRESS 2	16037A4 P3 2	1-2-T		1 PCS
1 PCS		21073	PA 1233A POWER AMPL. ESPL	- 4			1 PCS
1 PCS	2	14892	SHIELD	16217A4 1			1 PCS
2 PCS	C18	10094	CAP.CERAMIC ATC 100B101JP500X	-	100p 500V	0.05	1 PCS
1 PCS	C22	10205	CAP.CERAMIC ATC 100A200JP150DR	-	20p 150V	0.05	1 PCS
2 PCS	C28	10571	CAP.TANTALUM KYOC TAJD155M050R	-	1.5u 50V	20%	1 PCS
	C29	10571	CAP.TANTALUM KYOC TAJD155M050R	-	1.5u 50V	20%	1 PCS
	C31	10094	CAP.CERAMIC ATC 100B101JP500X	-	100p 500V	0.05	1 PCS
1 PCS	C35	10067	CAP.CERAMIC ATC 100B470KP500DR	-	47p 500V	0.1	1 PCS
1 PCS	C36	10593	CAP.TRIMMER TLEC 9612SL	-	3-20p		1 PCS
1 PCS	C37	10084	CAP.CERAMIC ATC 100B750JP500DR	-	75p 500V	0.05	1 PCS
2 PCS	C38	10092	CAP.CERAMIC ATC 100B120JP500DR	-	12p 500V	0.05	1 PCS
2 PCS	C39	10080	CAP.CERAMIC ATC 100B9R1JP500DR	-	9.1p 500V	0.05	1 PCS

Product: 18633 PA 1233A POWER AMPLIFIER PL Issue: 9 Change Order: 3489 Appr.: HSA Date: 100399

Tot.Quant.	Pos.	Part no.	Component Manu. Description	Drwg.no. Rev.	Value/Dim. Ratings	Tol. Function	Quant./Pos.
2 PCS	C40	10206	CAP.CERAMIC ATC 100B390JP500DR	-	39p 500V	0.05	1 PCS
2 PCS	C41	10129	CAP.CERAMIC ATC 100B270JP500DR	-	27p 500V	0.05	1 PCS
	C42	10129	CAP.CERAMIC ATC 100B270JP500DR	-	27p 500V	0.05	1 PCS
	C43	10206	CAP.CERAMIC ATC 100B390JP500DR	-	39p 500V	0.05	1 PCS
	C44	10080	CAP.CERAMIC ATC 100B9R1JP500DR	-	9.1p 500V	0.05	1 PCS
	C45	10092	CAP.CERAMIC ATC 100B120JP500DR	-	12p 500V	0.05	1 PCS
2 PCS	L01	13476	INDUCTOR COIL 1008CS-101XKBC	-	0.10u		1 PCS
2 PCS	L02	13537	INDUCTOR COIL 1008CS-470XKBC	-	47n	10%	1 PCS
1 PCS	L03	13482	INDUCTOR COIL 1008CS 102XKBC ALT.HS	-	1u		1 PCS
1 PCS	L04	13530	INDUCTOR COIL 1008CS-560XKBC	-	56n	10%	1 PCS
1 PCS	L05	13528	INDUCTOR COIL 1008CS-271XKBC	-	270n	10%	1 PCS
	L06	13476	INDUCTOR COIL 1008CS-101XKBC	-	0.10u		1 PCS
1 PCS	L07	13527	INDUCTOR COIL 1008CS-220XMBC	-	22n	20%	1 PCS
1 PCS	L09	13532	INDUCTOR COIL 132-15 345nH +-5%	-	345n	5%	1 PCS
2 PCS	L10	13534	INDUCTOR COIL 132-05 64nH +-5%	-	64n	5%	1 PCS
2 PCS	L11	13533	INDUCTOR COIL 132-07 99nH +-5%	-	99n	5%	1 PCS

Product: 18633 PA 1233A POWER AMPLIFIER PL Issue: 9 Change Order: 3489 Appr.: HSA Date: 100399

Tot.Quant.	Pos.	Part no.	Component Manu. Description	Drwg.no. Rev.	Value/Dim. Ratings	Tol. Function	Quant./Pos.
	L12	13533	INDUCTOR COIL 132-07 99nH +-5%	-	99n	5%	1 PCS
	L13	13534	INDUCTOR COIL 132-05 64nH +-5%	-	64n	5%	1 PCS
	L14	13537	INDUCTOR COIL 1008CS-470XKBC	-	47n	10%	1 PCS
3 PCS	P01	12303	CONN. MOLX 22-27-2021	-			1 PCS
	P02	12303	CONN. MOLX 22-27-2021	-			1 PCS
	P03	12303	CONN. MOLX 22-27-2021	-			1 PCS
1 PCS	Q01	11302	TRANSISTOR PH BLT80,115 (TAPE)	-	SOT-223		1 PCS
2 PCS	R06	11134	POTENTIOMETER BOUR 3266W-1-103	-	10k 0.25W	10%	1 PCS
	R19	11134	POTENTIOMETER BOUR 3266W-1-103	-	10k 0.25W	10%	1 PCS
1 PCS	R25	10621	RES.METALFILM PH 2322 195 13102	-	1K 750V	5%	1 PCS

Product: 18635 PA 1233A POWER AMPLIFIER CPL Issue: 3 Change Order: 3338 Appr.: [illegible] Date: 23.9.98.

Tot.Quant.	Pos.	Part no.	Component Manu. Description	Drwg.no. Rev.	Value/Dim. Ratings	Tol. Function	Quant./Pos.
2 PCS		12128	CONN.COAX SUHN 16 SMB-50-2-10/133	-		SMB-MALE	2 PCS
.19 M		19676	COAX CABLE RG 316/U	-			190 MM

Product: 21073 PA 1233A POWER AMPL. ESPL Issue: 4 Change Order: 3386 Appr.: H.S. Date: 10.11.98.

Tot.Quant.	Pos.	Part no.	Component Manu. Description	Drwg.no. Rev.	Value/Dim. Ratings	Tol. Function	Quant./Pos.
1 PCS	C01	19838	CAP.SMD XXXX 0805C680J50	-	68P 50V	5%	1 PCS
1 PCS	C02	19832	CAP.SMD XXXX 0805C270J50	-	27P 50V	5%	1 PCS
6 PCS	C03	19840	CAP.SMD XXXX 0805C101J50	-	100P 50V	5%	1 PCS
9 PCS	C04	19852	CAP.SMD XXXX 0805C102J50	-	1N 50V	5%	1 PCS
	C05	19840	CAP.SMD XXXX 0805C101J50	-	100P 50V	5%	1 PCS
	C06	19852	CAP.SMD XXXX 0805C102J50	-	1N 50V	5%	1 PCS
	C13	19852	CAP.SMD XXXX 0805C102J50	-	1N 50V	5%	1 PCS
	C14	19840	CAP.SMD XXXX 0805C101J50	-	100P 50V	5%	1 PCS
	C15	19852	CAP.SMD XXXX 0805C102J50	-	1N 50V	5%	1 PCS
	C19	19852	CAP.SMD XXXX 0805C102J50	-	1N 50V	5%	1 PCS
	C20	19840	CAP.SMD XXXX 0805C101J50	-	100P 50V	5%	1 PCS
	C25	19840	CAP.SMD XXXX 0805C101J50	-	100P 50V	5%	1 PCS
	C26	19852	CAP.SMD XXXX 0805C102J50	-	1N 50V	5%	1 PCS
	C27	19852	CAP.SMD XXXX 0805C102J50	-	1N 50V	5%	1 PCS
	C30	19852	CAP.SMD XXXX 0805C102J50	-	1N 50V	5%	1 PCS
	C32	19852	CAP.SMD XXXX 0805C102J50	-	1N 50V	5%	1 PCS

Product: 21073 PA 1233A POWER AMPL. ESPL Issue: 4 Change Order: 3386 Appr.: H.S. Date: 10.11.98

Tot.Quant.	Pos.	Part no.	Component Manu. Description	Drwg.no. Rev.	Value/Dim. Ratings	Tol. Function	Quant./Pos.
	C33	19840	CAP.SMD XXXX 0805C101J50	-	100P 50V	5%	1 PCS
1 PCS	R01	10909	SMD RESISTOR XXXX 1206F100	-	10 0.25W	1%	1 PCS
1 PCS	R02	10926	SMD RESISTOR XXXX 1206F510	-	51 0.25W	1%	1 PCS
1 PCS	R05	10903	SMD RESISTOR XXXX 1206F5R6	-	5.6 0.25W	1%	1 PCS
2 PCS	R07	10977	SMD RESISTOR XXXX 1206F103	-	10K 0.25W	1%	1 PCS
6 PCS	R08	10937	SMD RESISTOR XXXX 1206F201	-	200 0.25W	1%	1 PCS
	R09	10937	SMD RESISTOR XXXX 1206F201	-	200 0.25W	1%	1 PCS
5 PCS	R10	10933	SMD RESISTOR XXXX 1206F121	-	120 0.25W	1%	1 PCS
	R11	10933	SMD RESISTOR XXXX 1206F121	-	120 0.25W	1%	1 PCS
	R12	10933	SMD RESISTOR XXXX 1206F121	-	120 0.25W	1%	1 PCS
	R13	10933	SMD RESISTOR XXXX 1206F121	-	120 0.25W	1%	1 PCS
	R14	10933	SMD RESISTOR XXXX 1206F121	-	120 0.25W	1%	1 PCS
4 PCS	R15	10966	SMD RESISTOR XXXX 1206F362	-	3.6K 0.25W	1%	1 PCS
	R16	10966	SMD RESISTOR XXXX 1206F362	-	3.6K 0.25W	1%	1 PCS
	R17	10966	SMD RESISTOR XXXX 1206F362	-	3.6K 0.25W	1%	1 PCS
	R18	10966	SMD RESISTOR XXXX 1206F362	-	3.6K 0.25W	1%	1 PCS

Product: 21073 PA 1233A POWER AMPL. ESPL Issue: 4 Change Order: 3386 Appr.: [illegible] Date: 10.11.98

Tot.Quant.	Pos.	Part no.	Component Manu. Description	Drwg.no. Rev.	Value/Dim. Ratings	Tol. Function	Quant./Pos.
	R20	10977	SMD RESISTOR XXXX 1206F103	-	10K 0.25W	1%	1 PCS
	R21	10937	SMD RESISTOR XXXX 1206F201	-	200 0.25W	1%	1 PCS
	R22	10937	SMD RESISTOR XXXX 1206F201	-	200 0.25W	1%	1 PCS
	R23	10937	SMD RESISTOR XXXX 1206F201	-	200 0.25W	1%	1 PCS
	R24	10937	SMD RESISTOR XXXX 1206F201	-	200 0.25W	1%	1 PCS
1 PCS	R26	20100	JUMPER XXXX 1206F000	-	0 0.25W	1%	1 PCS

4.3 Photos

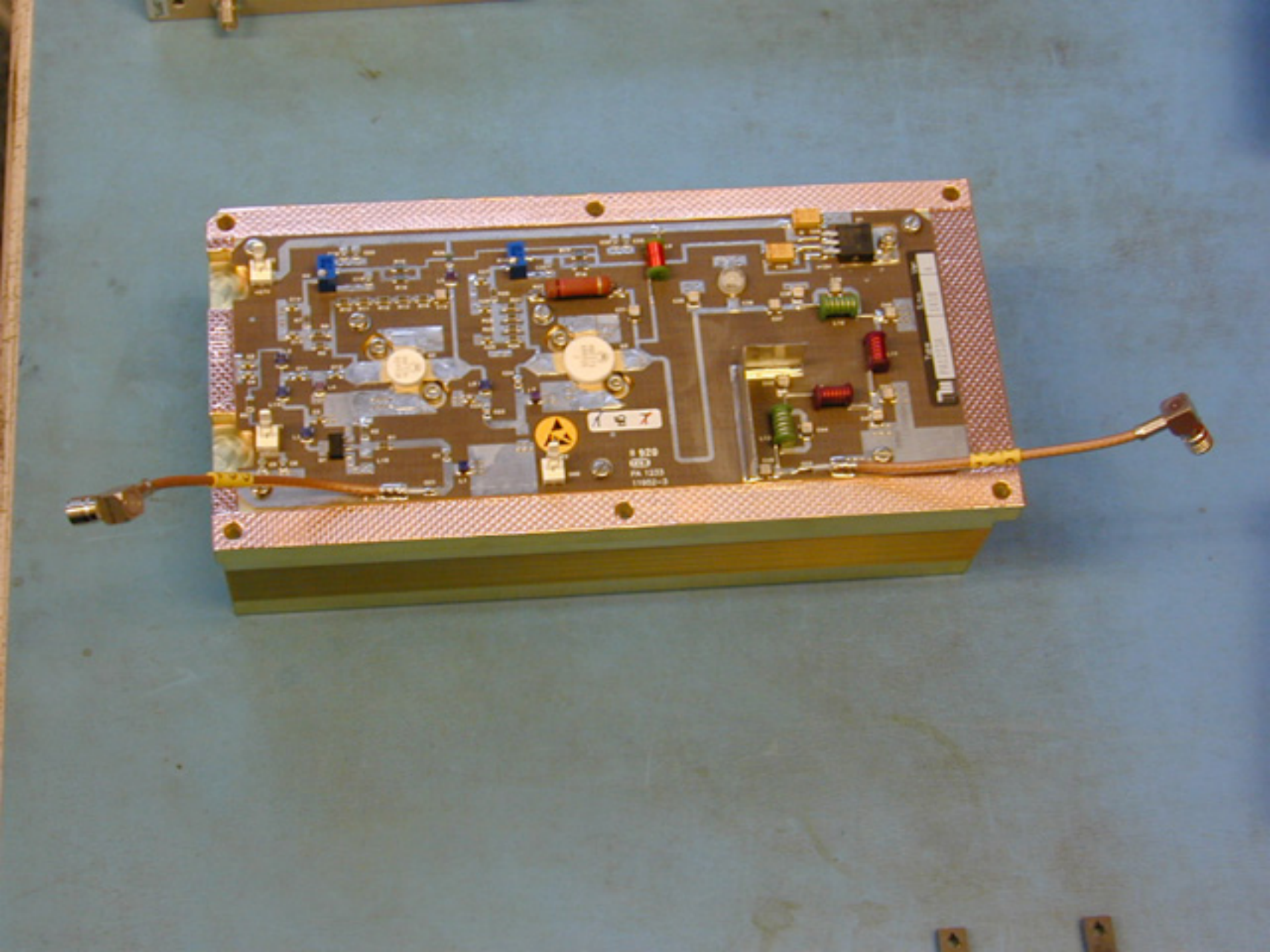

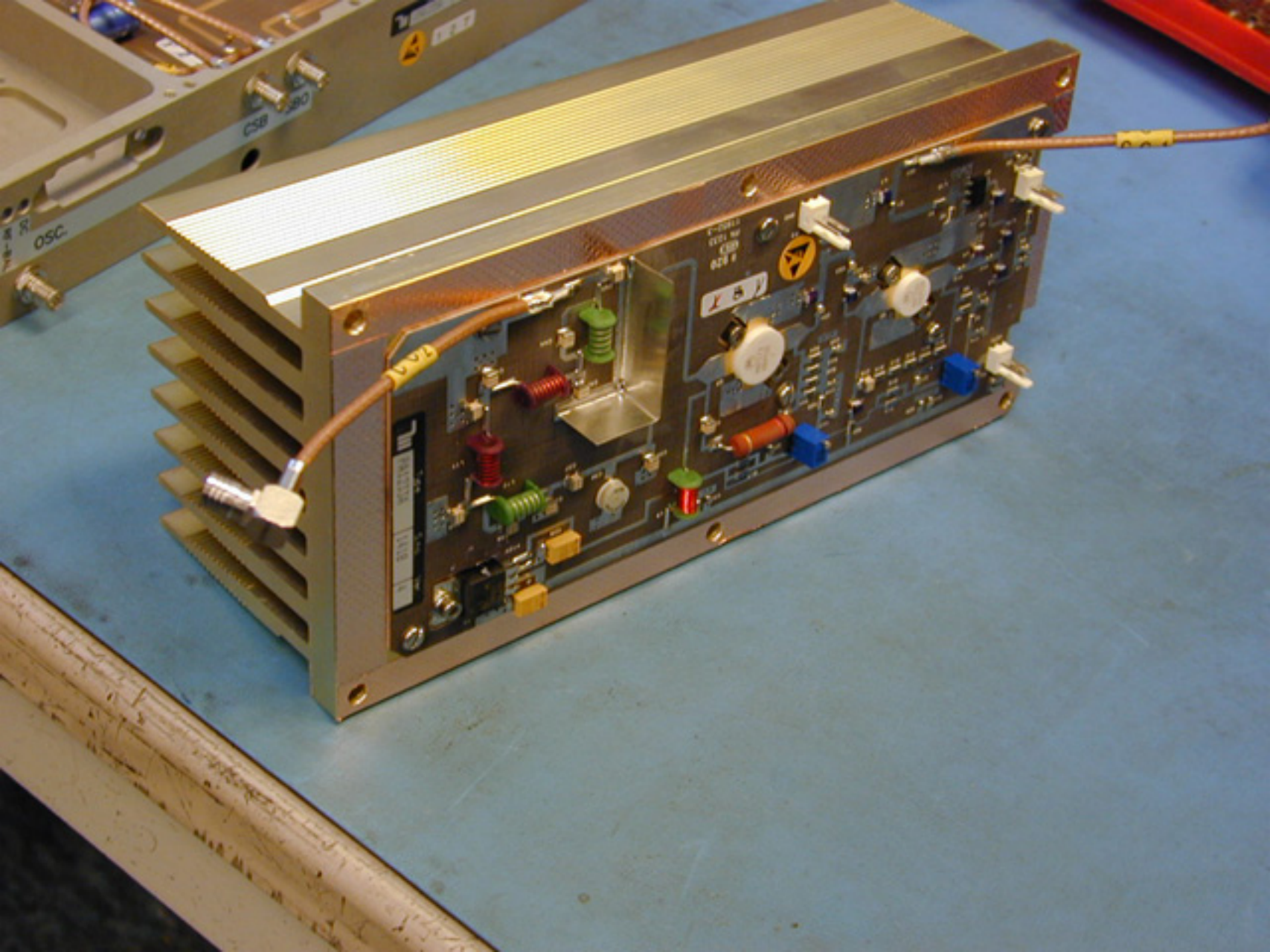
OSC.
CSB