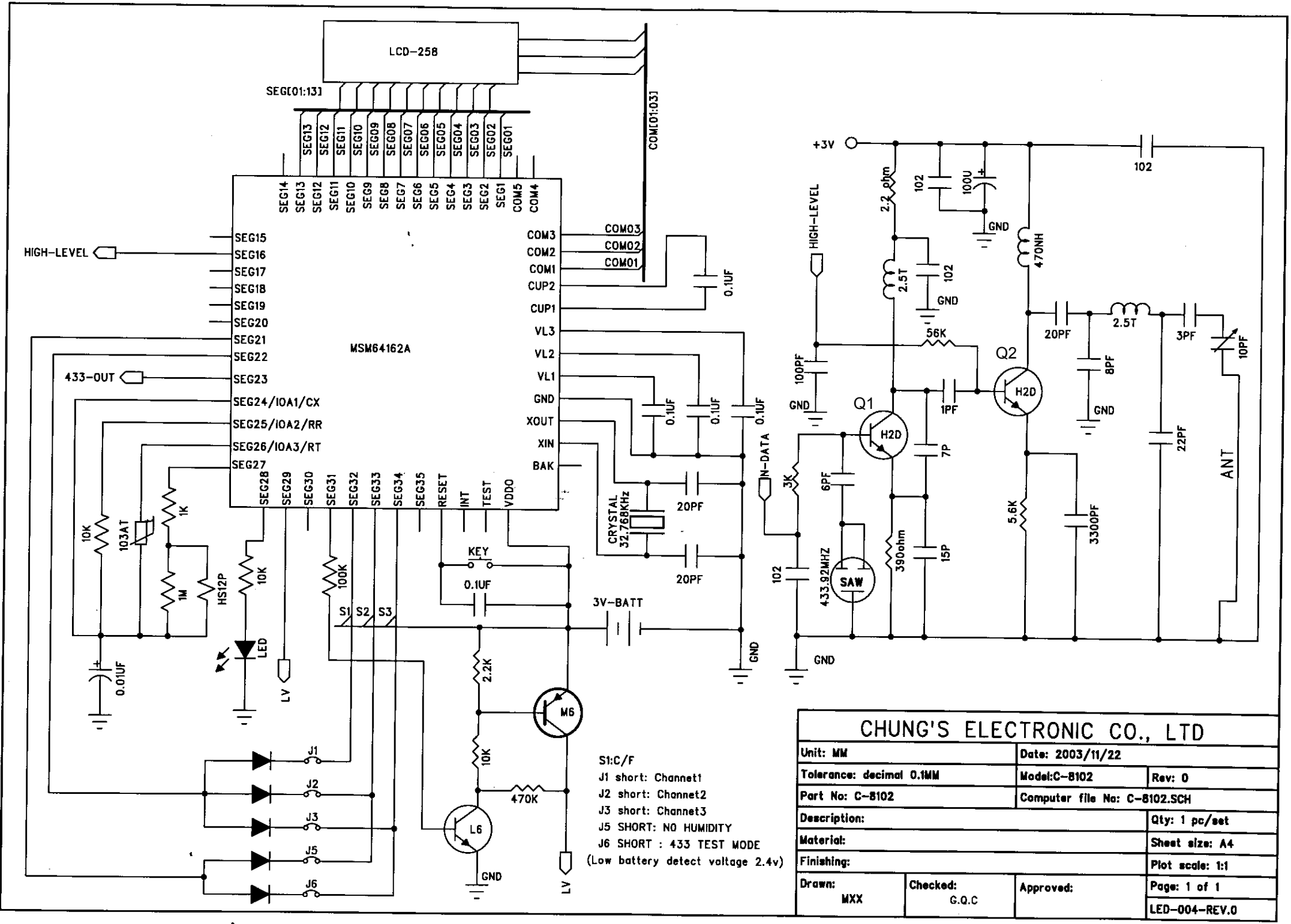
LCD-258
SEG[01:13]
COM[01:03]
MSM64162A
HIGH-LEVEL
433-OUT
N-DATA
CRYSTAL 32.768KHz
20PF
0.1UF
KEY
3V-BATT
LED
LV
GND
M6
L6
J1
J2
J3
J5
J6
S1 S2 S3
10K
103AT
1K
1M
HS12P
100K
2.2K
470K
0.01UF
+3V
2.2 ohm
2.5T
102
100U
470NH
56K
100PF
1PF
7P
6PF
15P
3K
390ohm
5.6K
3300PF
433.92MHZ
SAW
Q1
Q2
H2D
8PF
22PF
3PF
10PF
ANT
S1:C/F
J1 short: Channet1
J2 short: Channet2
J3 short: Channet3
J5 SHORT: NO HUMIDITY
J6 SHORT : 433 TEST MODE
(Low battery detect voltage 2.4v)
CHUNG'S ELECTRONIC CO., LTD
Unit: MM
Date: 2003/11/22
Tolerance: decimal 0.1MM
Model:C-8102
Rev: 0
Part No: C-8102
Computer file No: C-8102.SCH
Description:
Qty: 1 pc/set
Material:
Sheet size: A4
Finishing:
Plot scale: 1:1
Drawn: MXX
Checked: G.Q.C
Approved:
Page: 1 of 1
LED-004-REV.0