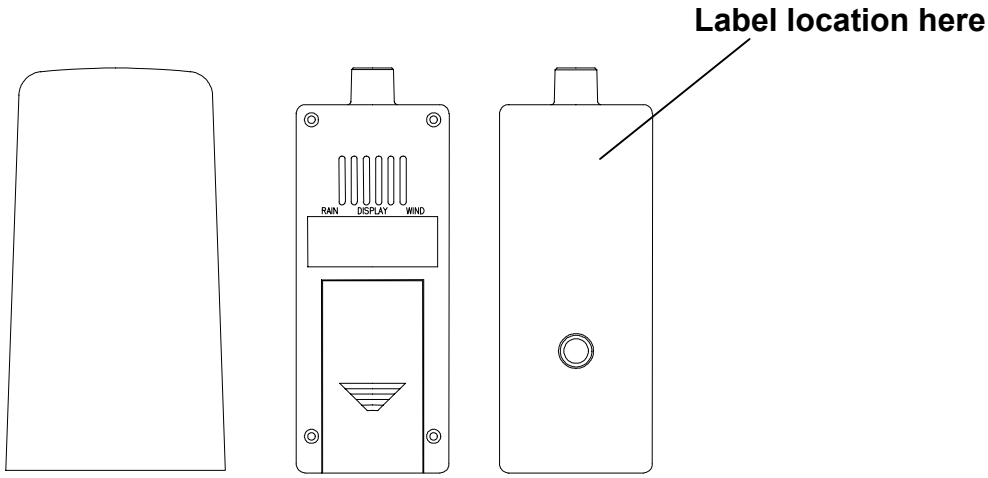
Label location here
RAIN
DISPLAY
WIND

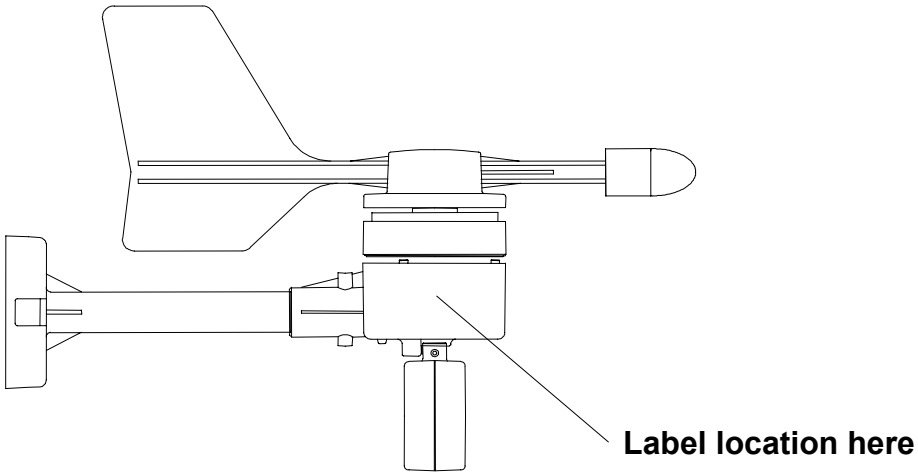
Label location here

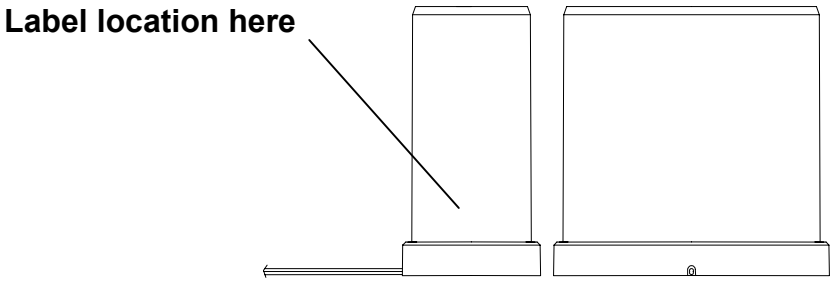
Label location here