APPENDIX D

: BLOCK DIAGRAM
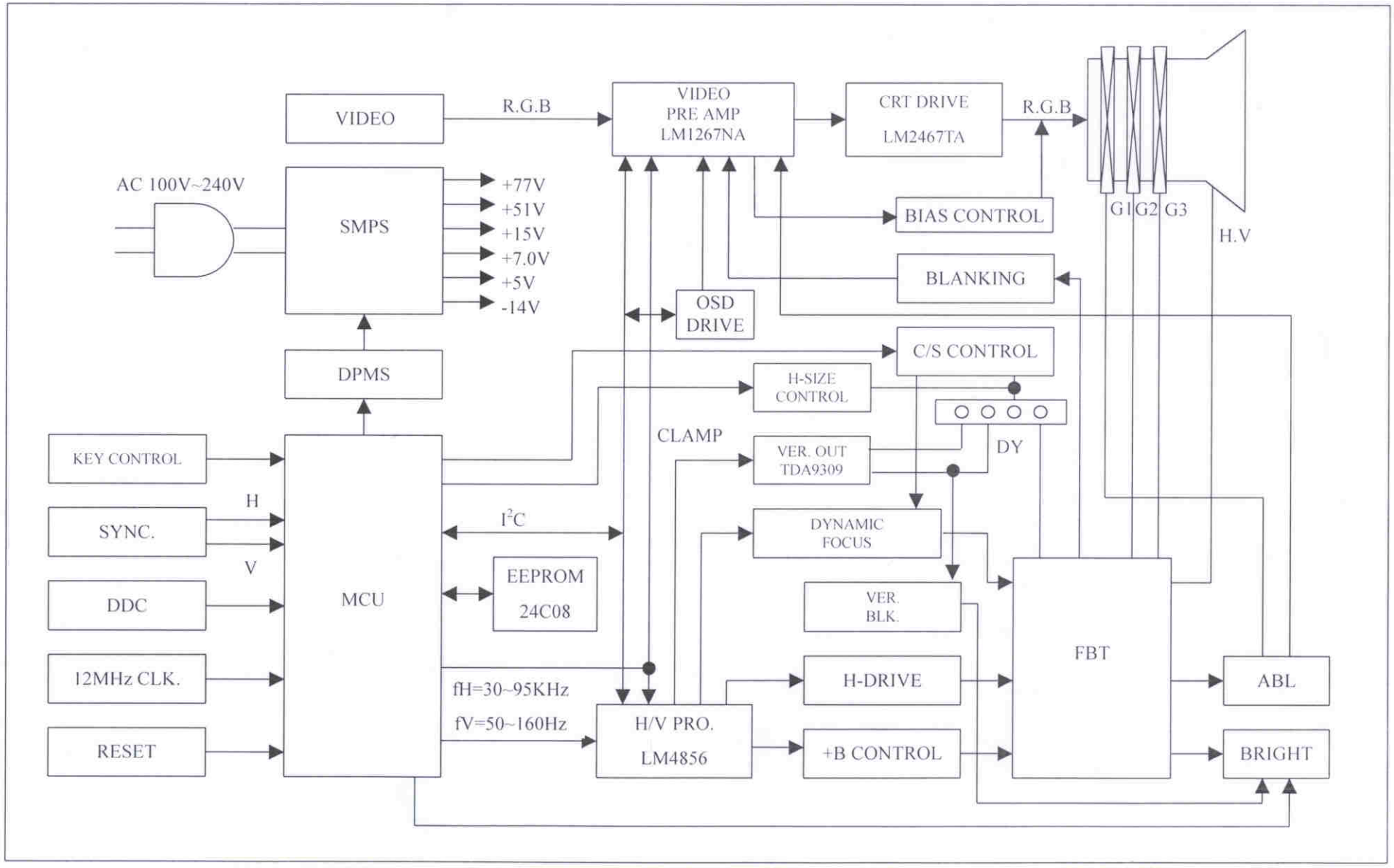
B19BF BLOCK DIAGRAM