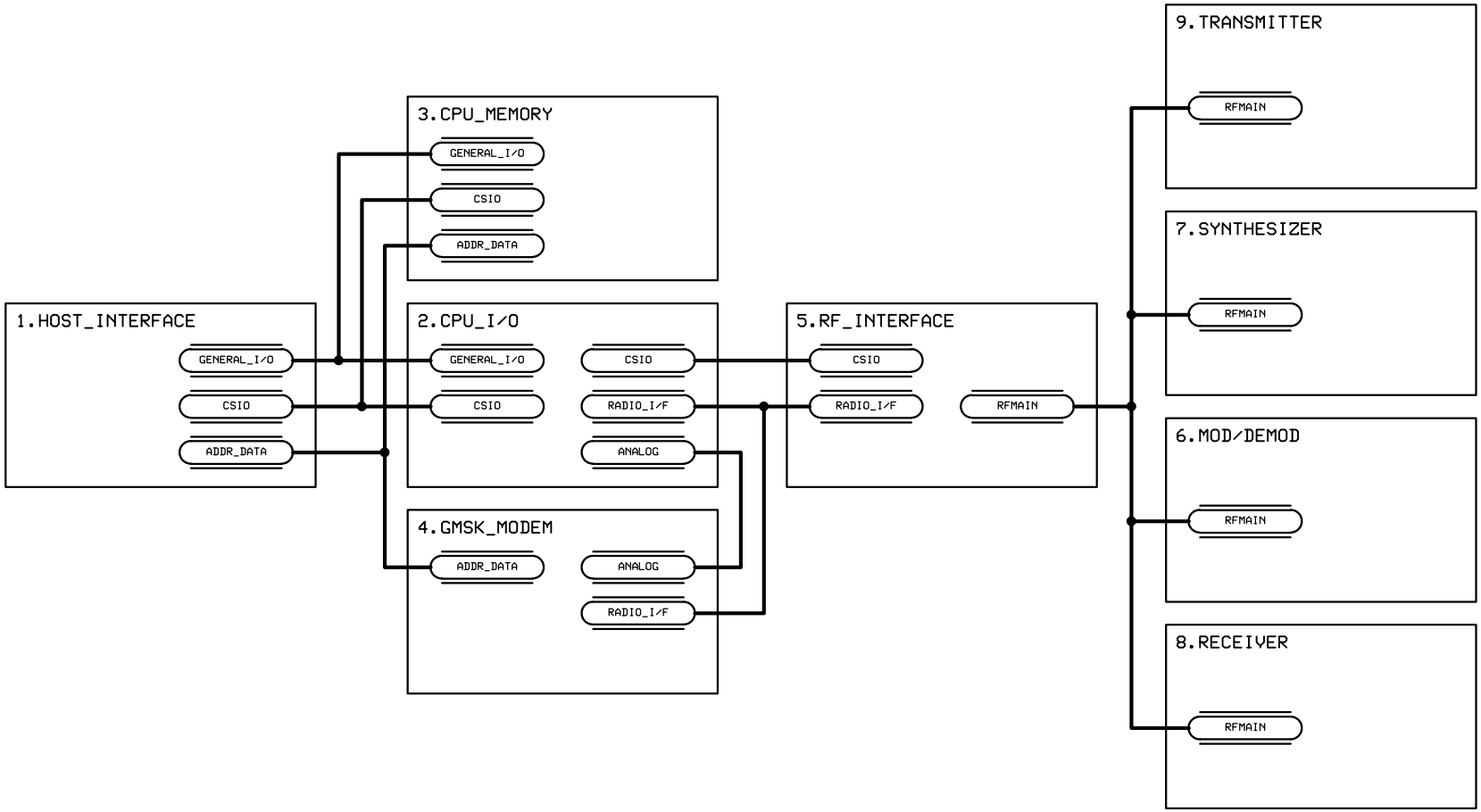


| REV | DESCRIPTION | DATE | APP |
|---|---|---|---|
| | | | |
| | | | |
| | | | |
| | | | |

NOMADIC COMMUNICATIONS PTY LTD

(C) COPYRIGHT 1999, ALL RIGHTS RESERVED

| APPROVALS | DATE | TITLE TOP | | |
|---|---|---|---|---|
| DESGN TND, BS, AH | 01/06/00 | | | |
| DRAWN BS, BG, AH | 01/06/00 | SIZE A4 | PROJECT NMX9P4 | REV A |
| CHCKD | 01/06/00 | | | |
| APPRD | 01/06/00 | SHEET 1 OF 10 | | |

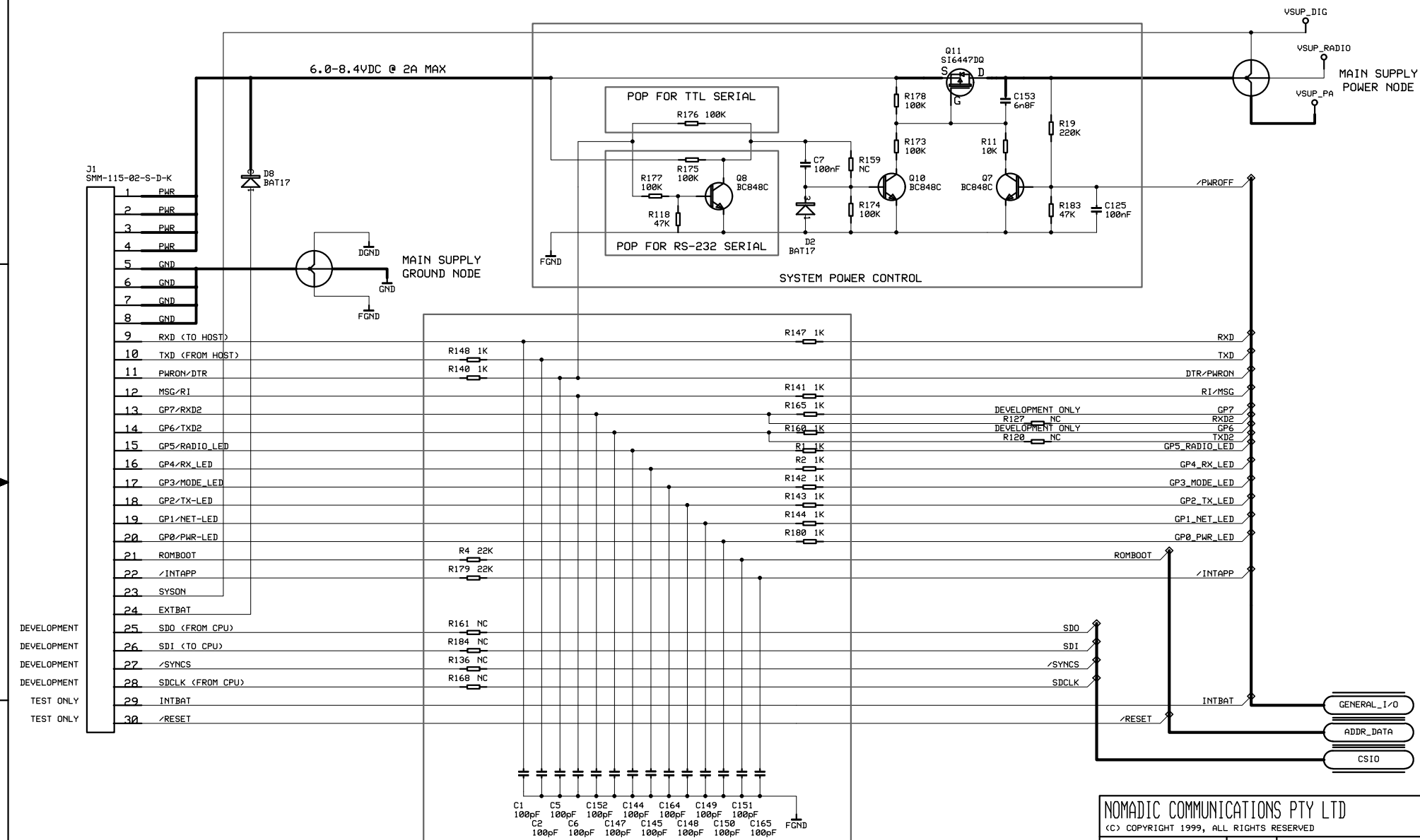


| REV | DESCRIPTION | DATE | APP |
|---|---|---|---|
| | | | |
| | | | |
| | | | |
| | | | |

NOMADIC COMMUNICATIONS PTY LTD

(C) COPYRIGHT 1999, ALL RIGHTS RESERVED

| APPROVALS | DATE | TITLE 1.HOST_INTERFACE | | |
|---|---|---|---|---|
| DESGN TND, BS, AH | 01/06/00 | | | |
| DRAWN BS, BG, AH | 01/06/00 | SIZE A4 | PROJECT NMX9P4 | REV A |
| CHCKD | 01/06/00 | | | |
| APPRD | 01/06/00 | SHEET 2 OF 10 | | |

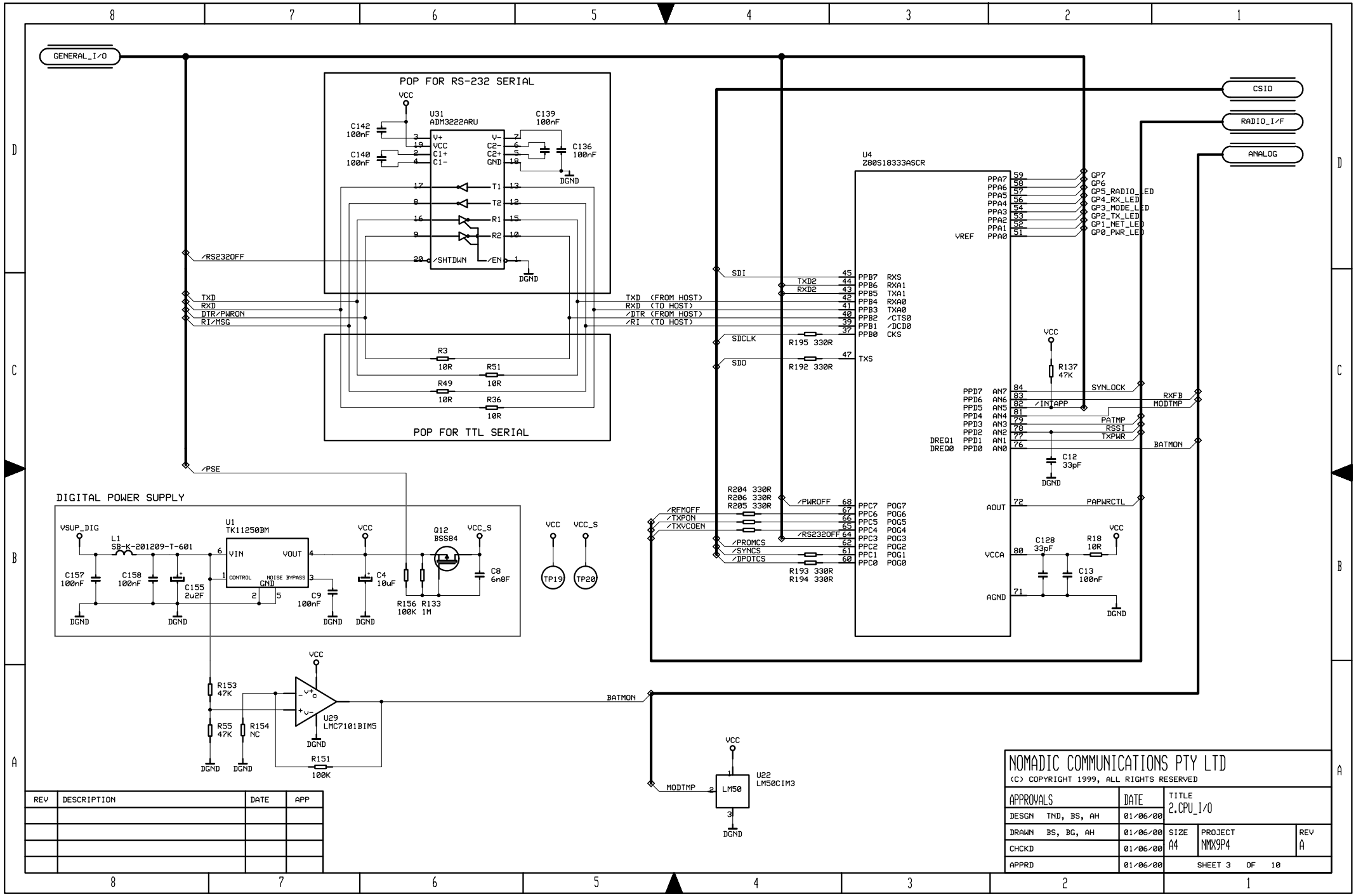


| REV | DESCRIPTION | DATE | APP |
|---|---|---|---|
| | | | |
| | | | |
| | | | |
| | | | |

NOMADIC COMMUNICATIONS PTY LTD

(C) COPYRIGHT 1999, ALL RIGHTS RESERVED

| APPROVALS | DATE | TITLE 2.CPU_I/O | | |
|---|---|---|---|---|
| DESGN TND, BS, AH | 01/06/00 | | | |
| DRAWN BS, BG, AH | 01/06/00 | SIZE A4 | PROJECT NMX9P4 | REV A |
| CHCKD | 01/06/00 | | | |
| APPRD | 01/06/00 | SHEET 3 OF 10 | | |

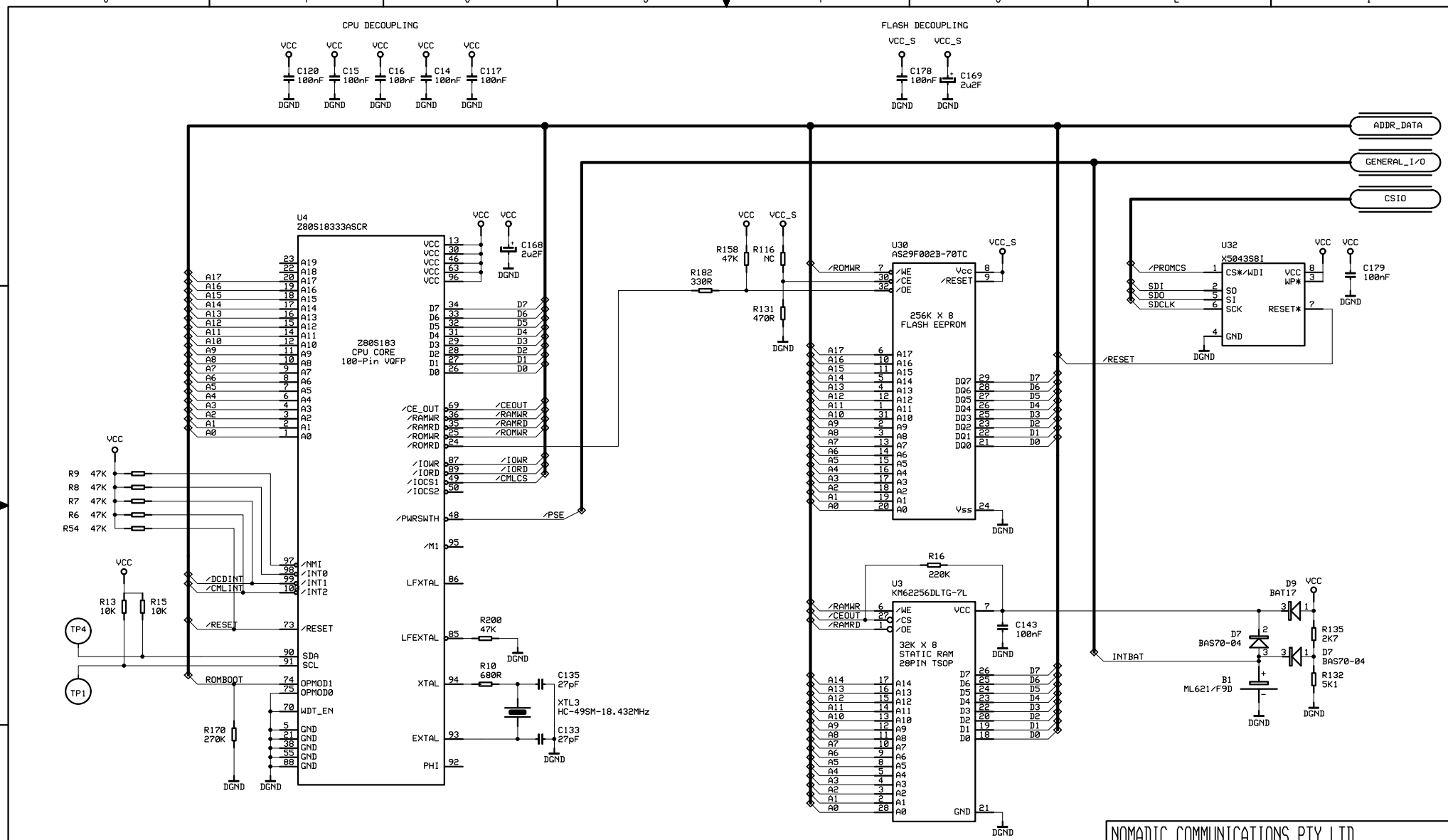


| REV | DESCRIPTION | DATE | APP |
|---|---|---|---|
| | | | |
| | | | |
| | | | |
| | | | |

NOMADIC COMMUNICATIONS PTY LTD

(C) COPYRIGHT 1999, ALL RIGHTS RESERVED

| APPROVALS | DATE | TITLE | | |
|---|---|---|---|---|
| DESGN TND, BS, AH | 01/06/00 | 3.CPU_MEMORY | | |
| DRAWN BS, BG, AH | 01/06/00 | SIZE A4 | PROJECT NMX9P4 | REV A |
| CHCKD | 01/06/00 | | | |
| APPRD | 01/06/00 | SHEET 4 OF 10 | | |

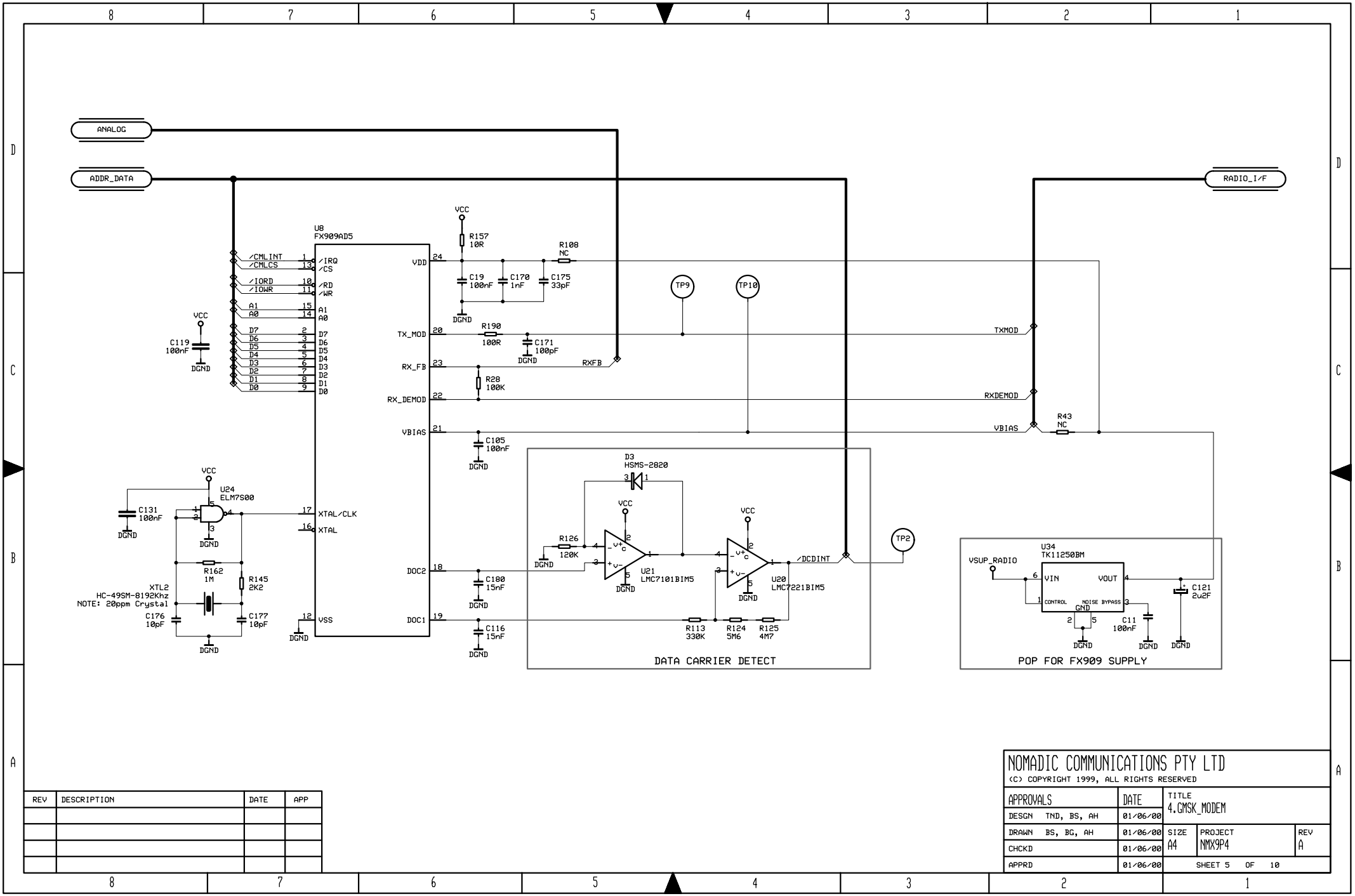


| REV | DESCRIPTION | DATE | APP |
|---|---|---|---|
| | | | |
| | | | |
| | | | |
| | | | |

NOMADIC COMMUNICATIONS PTY LTD

(C) COPYRIGHT 1999, ALL RIGHTS RESERVED

| APPROVALS | DATE | TITLE 4.GMSK_MODEM | | |
|---|---|---|---|---|
| DESGN TND, BS, AH | 01/06/00 | | | |
| DRAWN BS, BG, AH | 01/06/00 | SIZE A4 | PROJECT NMX9P4 | REV A |
| CHCKD | 01/06/00 | | | |
| APPRD | 01/06/00 | SHEET 5 OF 10 | | |

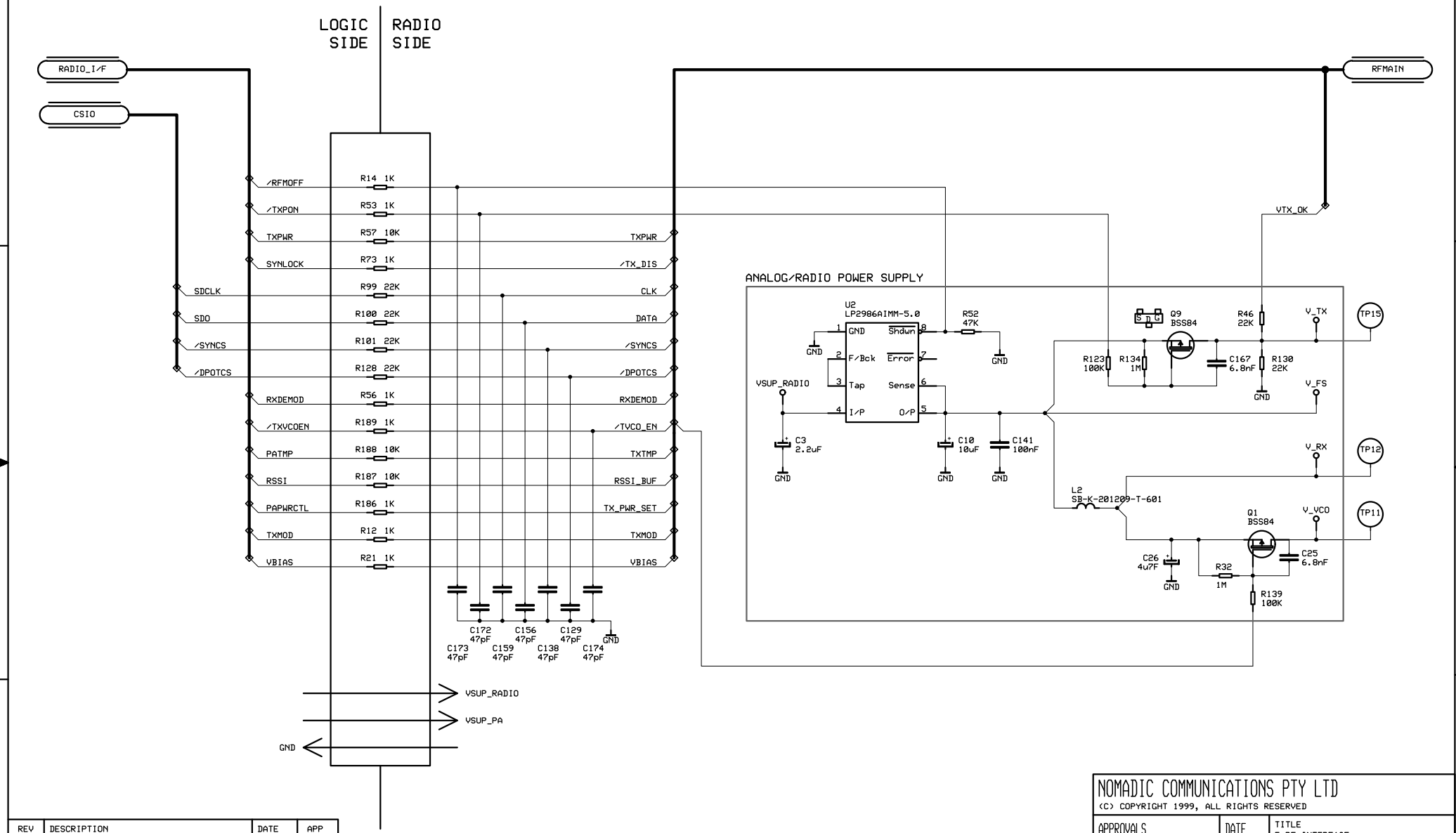


| REV | DESCRIPTION | DATE | APP |
|---|---|---|---|
| | | | |
| | | | |
| | | | |
| | | | |

NOMADIC COMMUNICATIONS PTY LTD

(C) COPYRIGHT 1999, ALL RIGHTS RESERVED

| APPROVALS | DATE | TITLE 5.RF_INTERFACE | | |
|---|---|---|---|---|
| DESGN TND, BS, AH | 01/06/00 | | | |
| DRAWN BS, BG, AH | 01/06/00 | SIZE A4 | PROJECT NMX9P4 | REV A |
| CHCKD | 01/06/00 | | | |
| APPRD | 01/06/00 | SHEET 6 OF 10 | | |

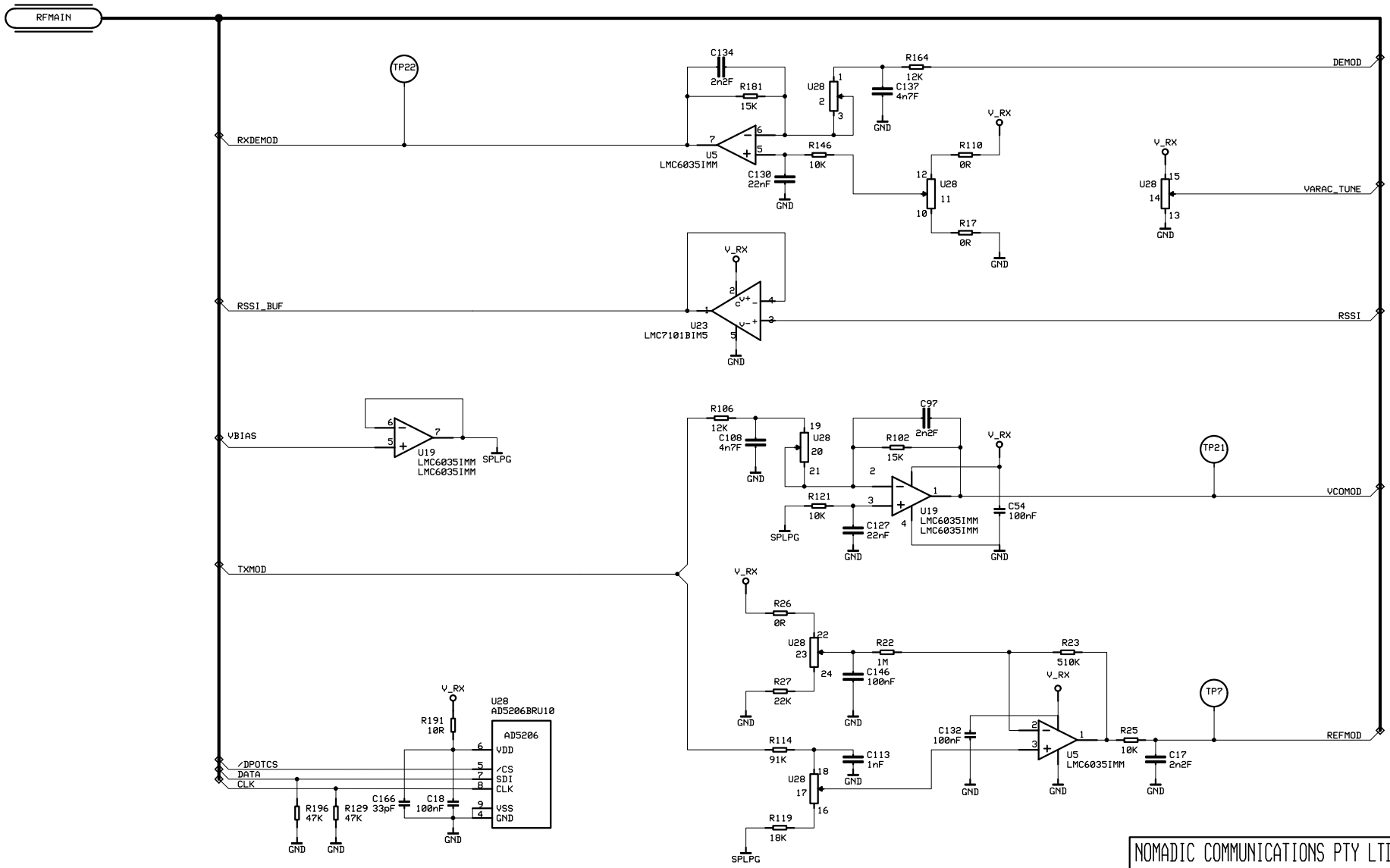


| REV | DESCRIPTION | DATE | APP |
|---|---|---|---|
| | | | |
| | | | |
| | | | |
| | | | |

NOMADIC COMMUNICATIONS PTY LTD

(C) COPYRIGHT 1999, ALL RIGHTS RESERVED

| APPROVALS | DATE | TITLE 6.MOD/DEMOD | | |
|---|---|---|---|---|
| DESGN TND, BS, AH | 01/06/00 | | | |
| DRAWN BS, BG, AH | 01/06/00 | SIZE A4 | PROJECT NMX9P4 | REV A |
| CHCKD | 01/06/00 | | | |
| APPRD | 01/06/00 | SHEET 7 OF 10 | | |

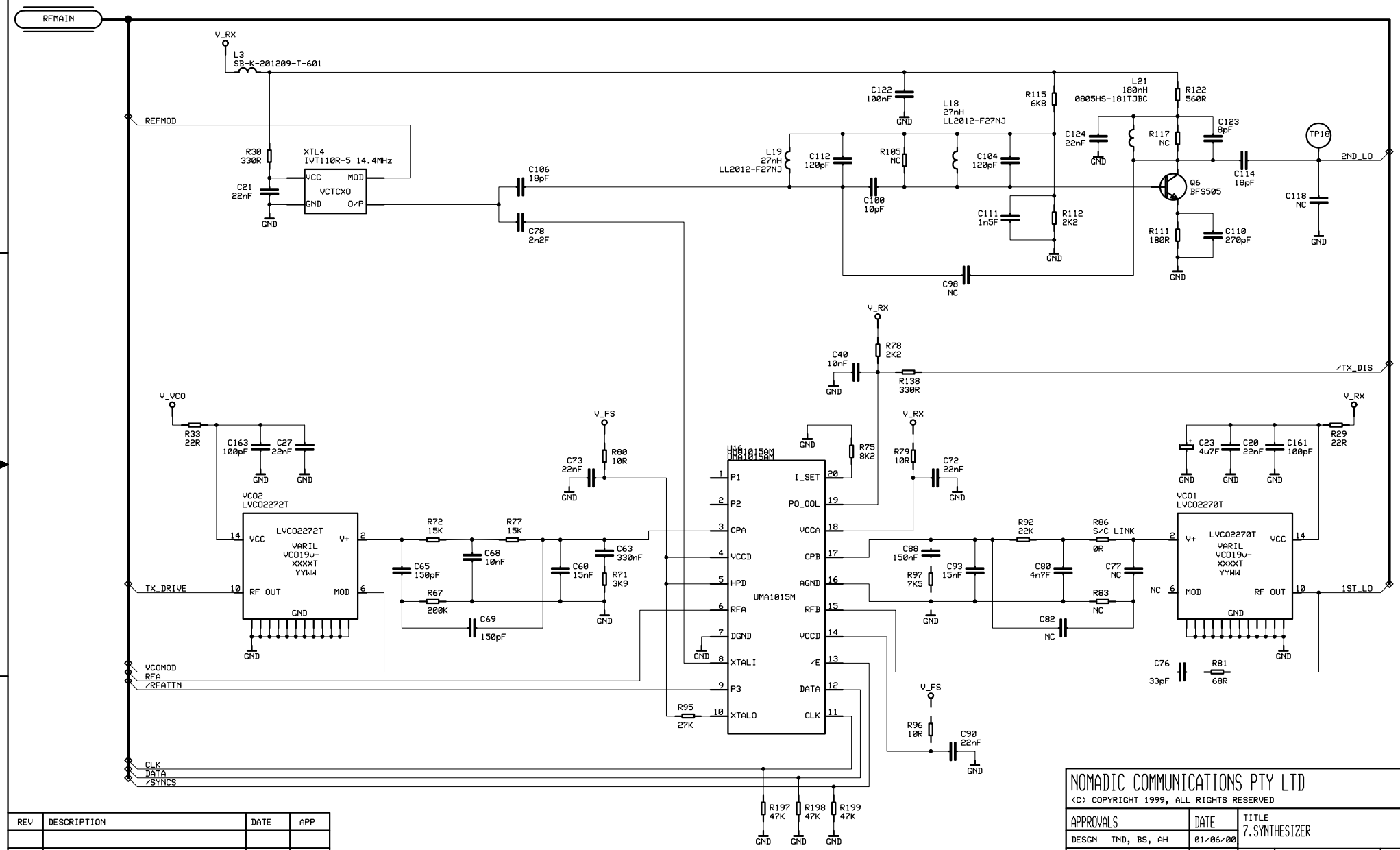


| REV | DESCRIPTION | DATE | APP |
|---|---|---|---|
| | | | |
| | | | |
| | | | |
| | | | |

NOMADIC COMMUNICATIONS PTY LTD

(C) COPYRIGHT 1999, ALL RIGHTS RESERVED

| APPROVALS | DATE | TITLE 7.SYNTHESIZER | | |
|---|---|---|---|---|
| DESGN TND, BS, AH | 01/06/00 | | | |
| DRAWN BS, BG, AH | 01/06/00 | SIZE A4 | PROJECT NMX9P4 | REV A |
| CHCKD | 01/06/00 | | | |
| APPRD | 01/06/00 | SHEET 8 OF 10 | | |

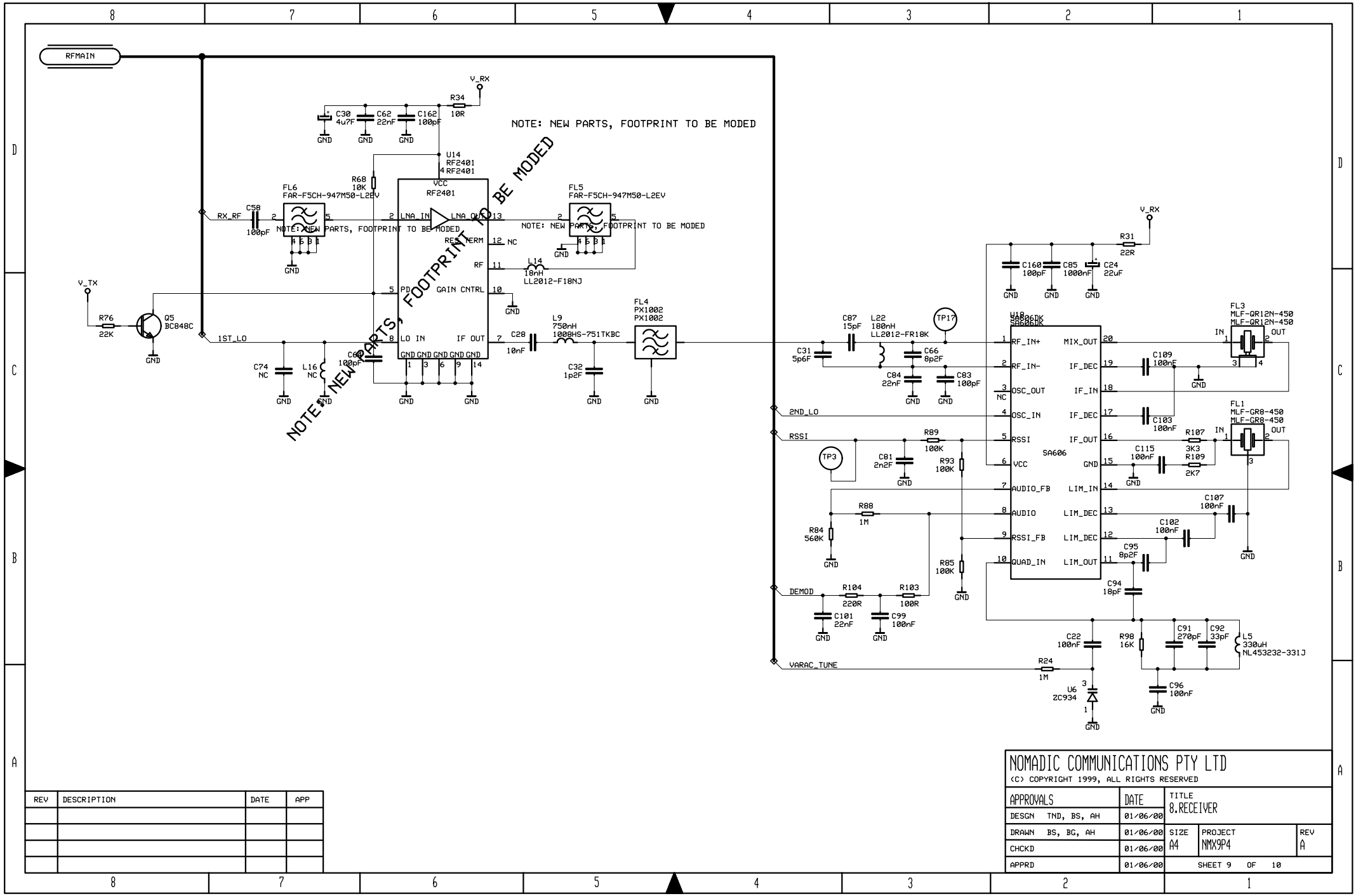


| REV | DESCRIPTION | DATE | APP |
|---|---|---|---|
| | | | |
| | | | |
| | | | |
| | | | |

NOMADIC COMMUNICATIONS PTY LTD

(C) COPYRIGHT 1999, ALL RIGHTS RESERVED

| APPROVALS | DATE | TITLE 8.RECEIVER | | |
|---|---|---|---|---|
| DESGN TND, BS, AH | 01/06/00 | | | |
| DRAWN BS, BG, AH | 01/06/00 | SIZE A4 | PROJECT NMX9P4 | REV A |
| CHCKD | 01/06/00 | | | |
| APPRD | 01/06/00 | SHEET 9 OF 10 | | |

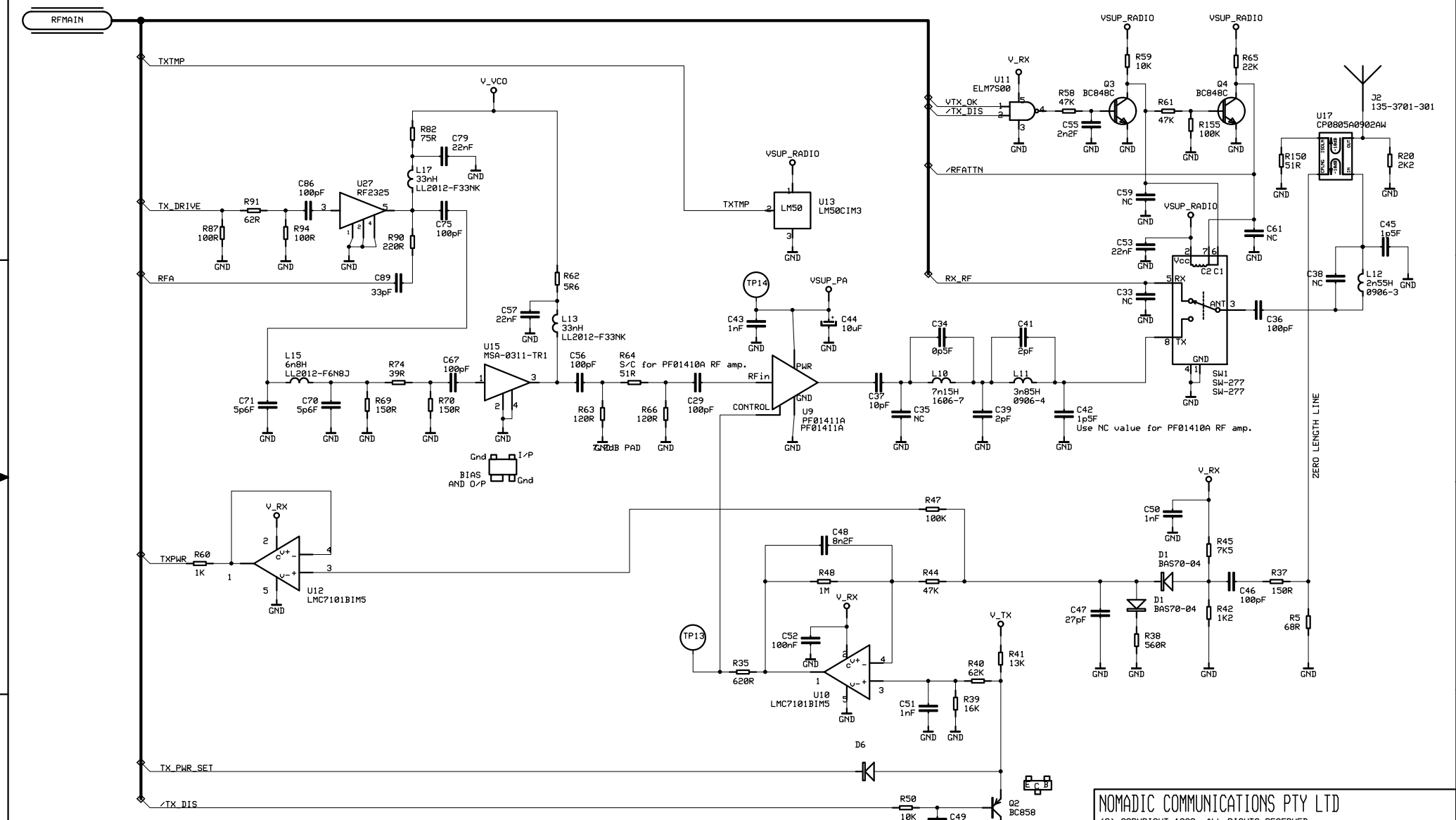


| REV | DESCRIPTION | DATE | APP |
|---|---|---|---|
| | | | |
| | | | |
| | | | |
| | | | |

NOMADIC COMMUNICATIONS PTY LTD

(C) COPYRIGHT 1999, ALL RIGHTS RESERVED

| APPROVALS | | DATE |
|---|---|---|
| DESGN | TND, BS, AH | 01/06/00 |
| DRAWN | BS, BG, AH | 01/06/00 |
| CHCKD | | 01/06/00 |
| APPRD | | 01/06/00 |

TITLE: 9.TRANSMITTER

| SIZE | PROJECT | REV |
|---|---|---|
| A4 | NMX9P4 | A |

SHEET 10 OF 10