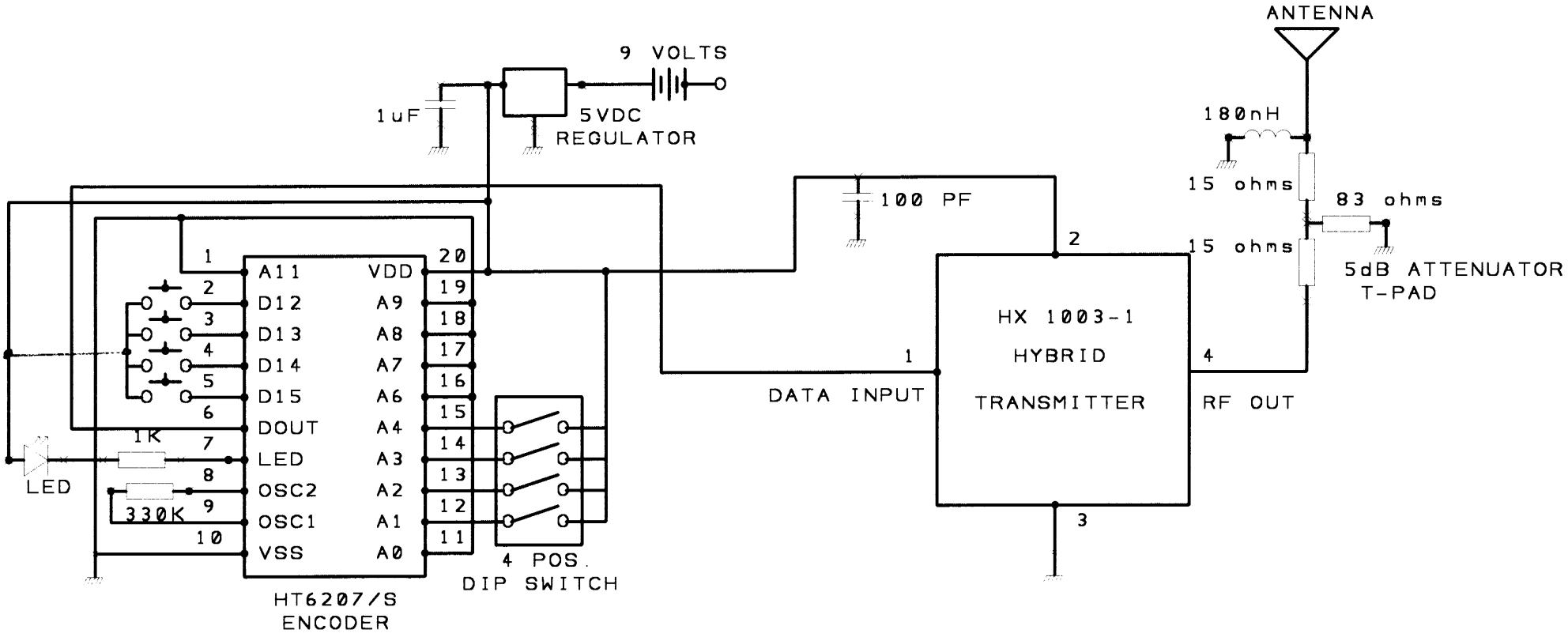

SCHEMATIC of LOVETT'S ELECTRONICS TX99 TRANSMITTER