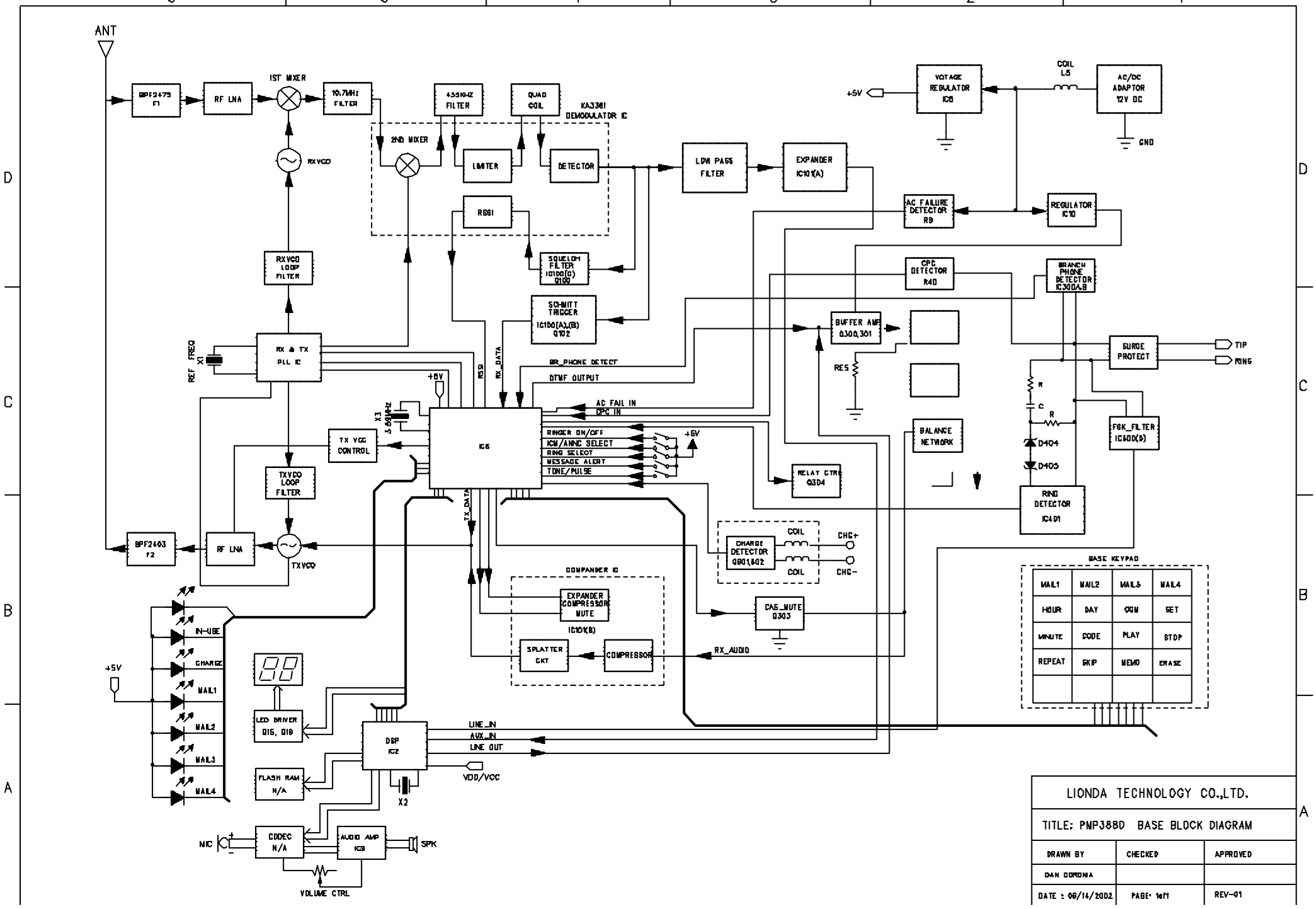
ANT
BPF2479 F1
RF LNA
1ST MIXER
10.7MHz FILTER
455KHZ FILTER
QUAD COIL
KA3361 DEMODULATOR IC
2ND MIXER
LIMITER
DETECTOR
RSSI
RXVCO
RXVCO LOOP FILTER
SQUELCH FILTER IC100(C) Q100
SCHMITT TRIGGER IC100(A),(B) Q102
LOW PASS FILTER
EXPANDER IC101(A)
VOTAGE REGULATOR IC8
COIL L5
AC/DC ADAPTOR 12V DC
GND
+5V
AC FAILURE DETECTOR R9
REGULATOR IC10
CPC DETECTOR R40
BRANCH PHONE DETECTOR IC300A,B
BUFFER AMP Q300,301
SURGE PROTECT
TIP
RING
R5
R
C
D404
D405
FGK_FILTER IC500(B)
RING DETECTOR IC401
BALANCE NETWORK
RELAY CTRL Q304
REF FREQ X1
RX & TX PLL IC
RSSI
RX_DATA
BR_PHONE DETECT
DTMF OUTPUT
AC FAIL IN
CPC IN
X3 3.58MHz
IC6
RINGER ON/OFF
ICM/ANNC SELECT
RING SELECT
MESSAGE ALERT
TONE/PULSE
TX VCO CONTROL
TXVCO LOOP FILTER
TX_DATA
BPF2403 F2
RF LNA
TXVCO
CHARGE DETECTOR Q601,602
COIL
CHG+
CHG-
COMPANDER IC
EXPANDER COMPRESSOR MUTE
IC101(B)
SPLATTER CKT
COMPRESSOR
CAS_MUTE Q303
RX_AUDIO
BASE KEYPAD
MAIL1
MAIL2
MAIL3
MAIL4
HOUR
DAY
COM
SET
MINUTE
CODE
PLAY
STOP
REPEAT
SKIP
MEMO
ERASE
IN-USE
CHARGE
MAIL1
MAIL2
MAIL3
MAIL4
LED DRIVER Q15, Q16
DSP IC2
LINE_IN
AUX_IN
LINE OUT
VDD/VCC
X2
FLASH RAM N/A
CODEC N/A
AUDIO AMP IC9
MIC
SPK
VOLUME CTRL
LIONDA TECHNOLOGY CO.,LTD.
TITLE: PMP388D BASE BLOCK DIAGRAM
DRAWN BY
CHECKED
APPROVED
DAN DORONIA
DATE : 06/14/2002
PAGE: 1of1
REV-01

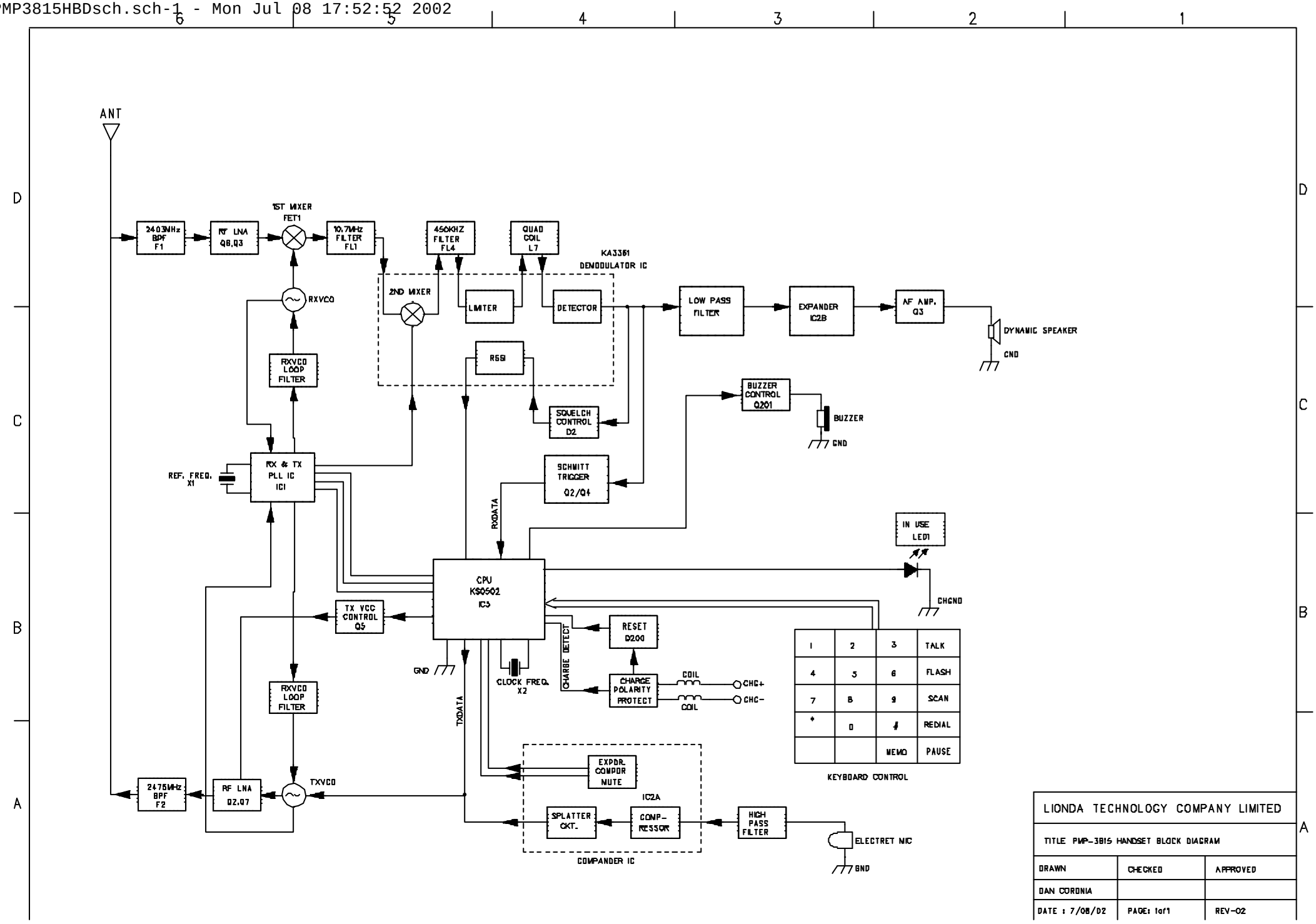
ANT
2403MHz BPF F1
RF LNA Q8,Q3
1ST MIXER FET1
10.7MHz FILTER FL1
450KHZ FILTER FL4
QUAD COIL L7
KA3361 DEMODULATOR IC
2ND MIXER
LIMITER
DETECTOR
LOW PASS FILTER
EXPANDER IC2B
AF AMP. Q3
DYNAMIC SPEAKER
GND
RXVCO
RXVCO LOOP FILTER
RSSI
SQUELCH CONTROL D2
BUZZER CONTROL Q201
BUZZER
GND
REF. FREQ. X1
RX & TX PLL IC IC1
SCHMITT TRIGGER Q2/Q4
RXDATA
IN USE LED1
CHGND
CPU KS0502 IC5
TX VCC CONTROL Q5
RESET D200
CHARGE DETECT
GND
CLOCK FREQ. X2
CHARGE POLARITY PROTECT
COIL
COIL
CHG+
CHG-
RXVCO LOOP FILTER
TXDATA
EXPDR. COMPDR MUTE
IC2A
SPLATTER CKT.
COMP-RESSOR
HIGH PASS FILTER
ELECTRET MIC
GND
COMPANDER IC
2475MHz BPF F2
RF LNA Q2,Q7
TXVCO
1 2 3 TALK
4 5 6 FLASH
7 8 9 SCAN
* 0 # REDIAL
MEMO PAUSE
KEYBOARD CONTROL
LIONDA TECHNOLOGY COMPANY LIMITED
TITLE PMP-3815 HANDSET BLOCK DIAGRAM
DRAWN
CHECKED
APPROVED
DAN CORONIA
DATE : 7/08/02
PAGE: 1of1
REV-02