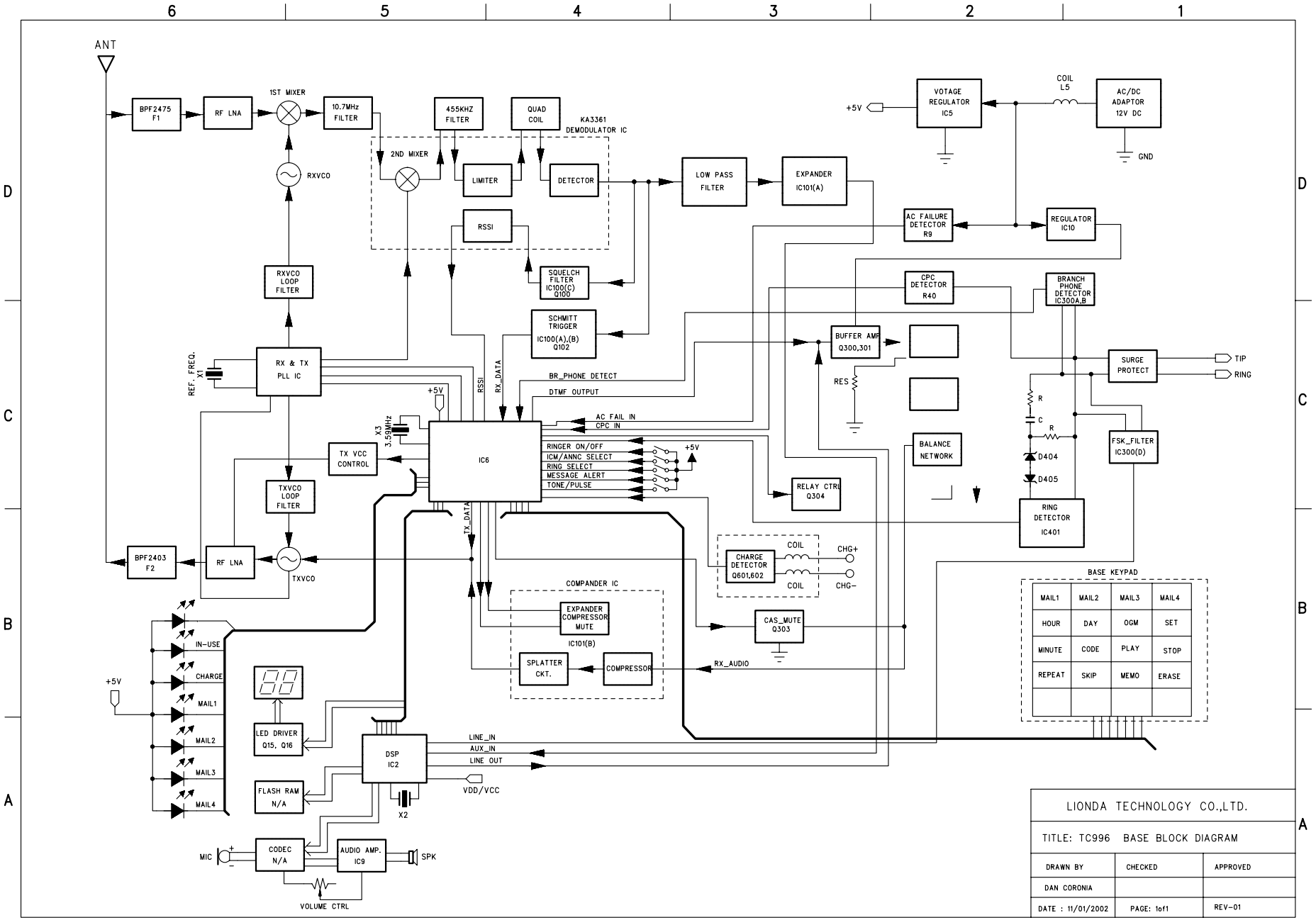
ANT
BPF2475 F1
RF LNA
1ST MIXER
10.7MHz FILTER
455KHZ FILTER
QUAD COIL
KA3361 DEMODULATOR IC
2ND MIXER
LIMITER
DETECTOR
RSSI
RXVCO
RXVCO LOOP FILTER
SQUELCH FILTER IC100(C) Q100
SCHMITT TRIGGER IC100(A),(B) Q102
LOW PASS FILTER
EXPANDER IC101(A)
+5V
VOTAGE REGULATOR IC5
COIL L5
AC/DC ADAPTOR 12V DC
GND
AC FAILURE DETECTOR R9
REGULATOR IC10
CPC DETECTOR R40
BRANCH PHONE DETECTOR IC300A,B
BUFFER AMP Q300,301
RES
SURGE PROTECT
TIP
RING
R
C
D404
D405
FSK_FILTER IC300(D)
BALANCE NETWORK
RELAY CTRL Q304
RING DETECTOR IC401
REF. FREQ. X1
RX & TX PLL IC
RSSI
RX_DATA
BR_PHONE DETECT
DTMF OUTPUT
AC FAIL IN
CPC IN
X3 3.58MHz
TX VCC CONTROL
IC6
RINGER ON/OFF
ICM/ANNC SELECT
RING SELECT
MESSAGE ALERT
TONE/PULSE
TXVCO LOOP FILTER
TX_DATA
BPF2403 F2
RF LNA
TXVCO
CHARGE DETECTOR Q601,602
COIL
CHG+
CHG−
COMPANDER IC
EXPANDER COMPRESSOR MUTE
IC101(B)
SPLATTER CKT.
COMPRESSOR
CAS_MUTE Q303
RX_AUDIO
BASE KEYPAD
MAIL1 MAIL2 MAIL3 MAIL4
HOUR DAY OGM SET
MINUTE CODE PLAY STOP
REPEAT SKIP MEMO ERASE
IN-USE
CHARGE
MAIL1
MAIL2
MAIL3
MAIL4
LED DRIVER Q15, Q16
DSP IC2
LINE_IN
AUX_IN
LINE OUT
VDD/VCC
X2
FLASH RAM N/A
MIC
CODEC N/A
AUDIO AMP. IC9
SPK
VOLUME CTRL
LIONDA TECHNOLOGY CO.,LTD.
TITLE: TC996 BASE BLOCK DIAGRAM
DRAWN BY
CHECKED
APPROVED
DAN CORONIA
DATE : 11/01/2002
PAGE: 1of1
REV-01