FRS CTCSS BLOCK DIAGRAM

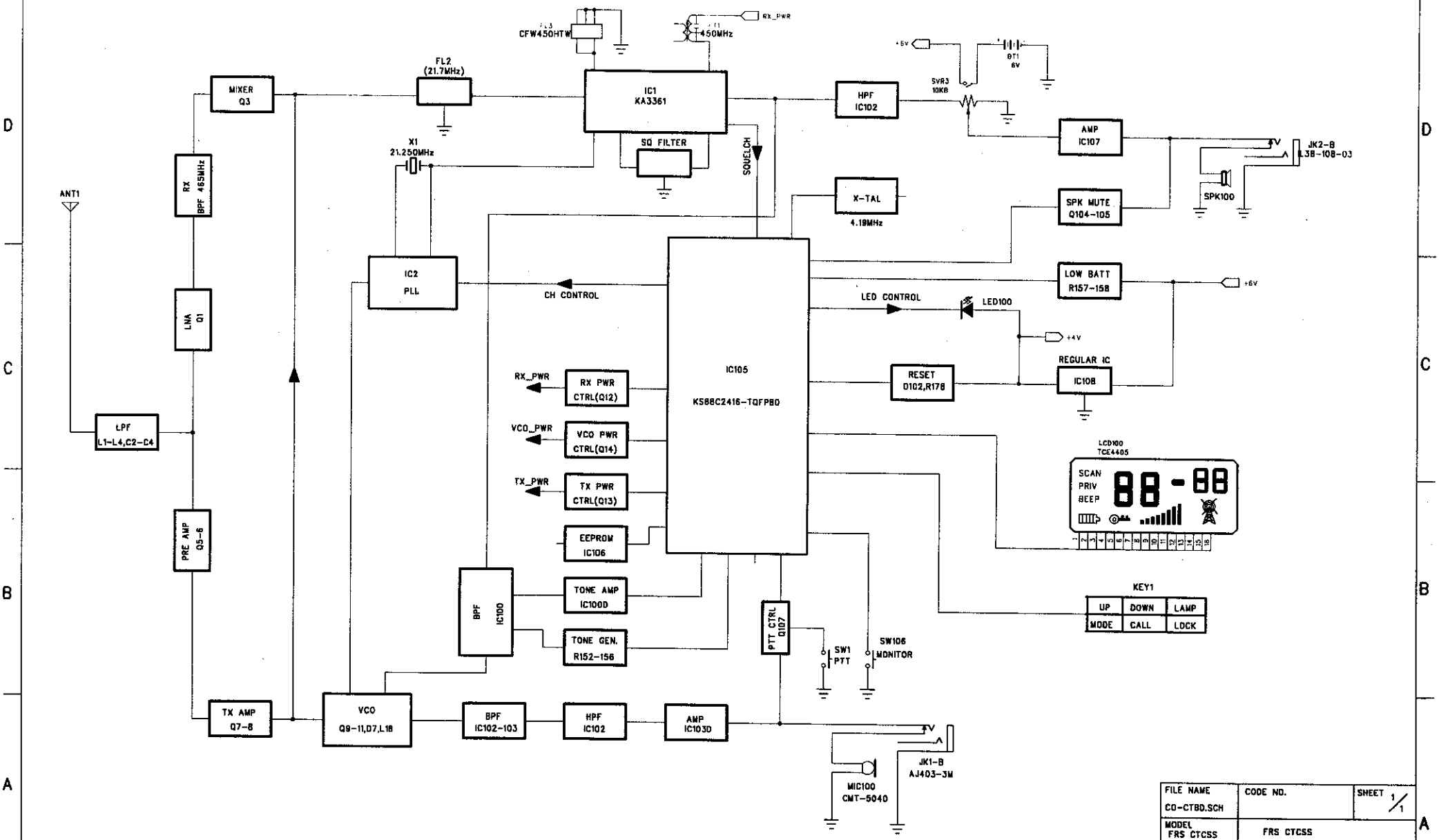

FILE NAME CO-CTBD.SCH	CODE NO.		SHEET 1/1
MODEL FRS CTCSS	FRS CTCSS		
DATE 00.03.29	DESIGN	CHECKED	APPROVED
REVISION REV_01	BAEK 00.03.29		