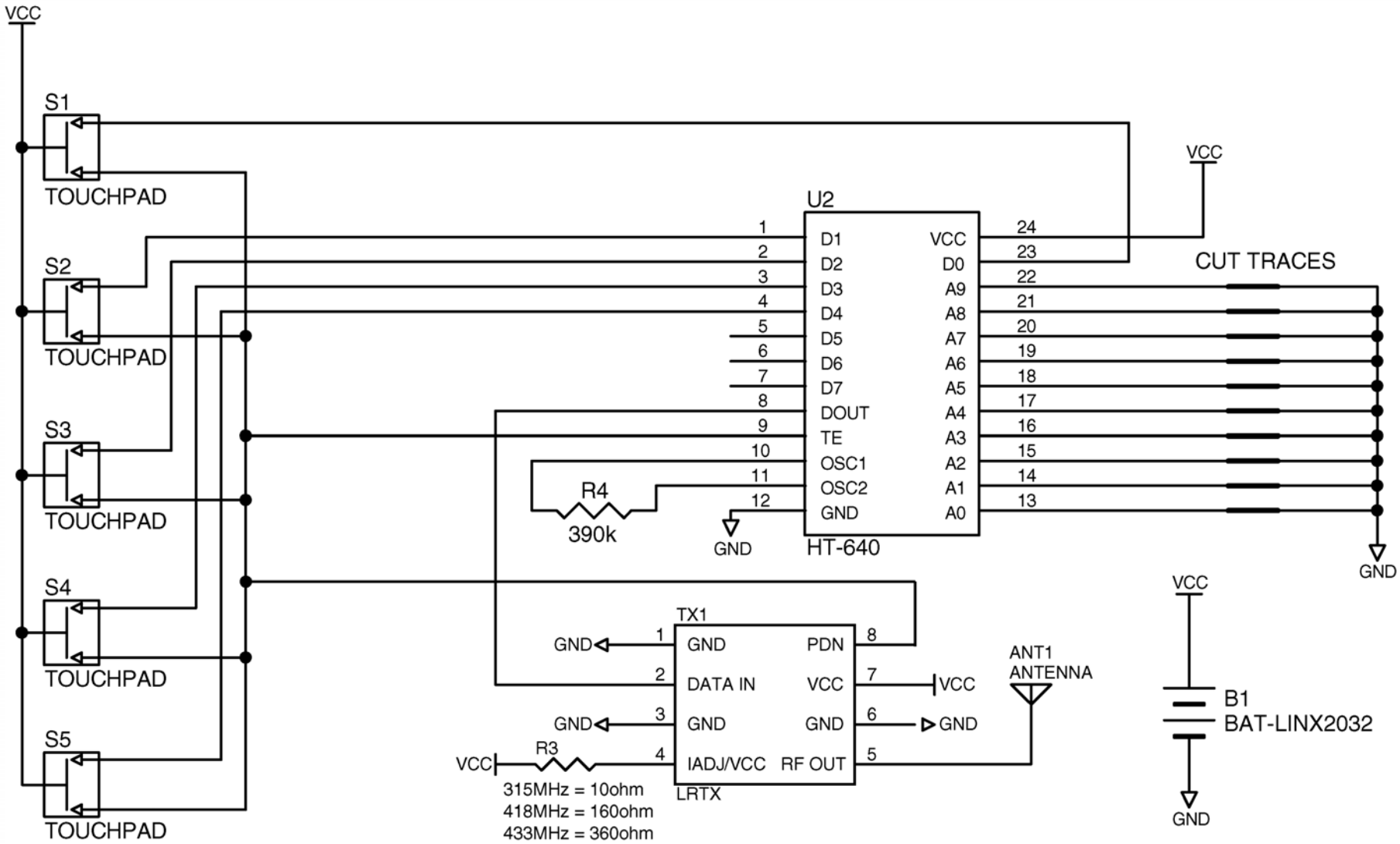CMD-KEYX-XXX Schematic