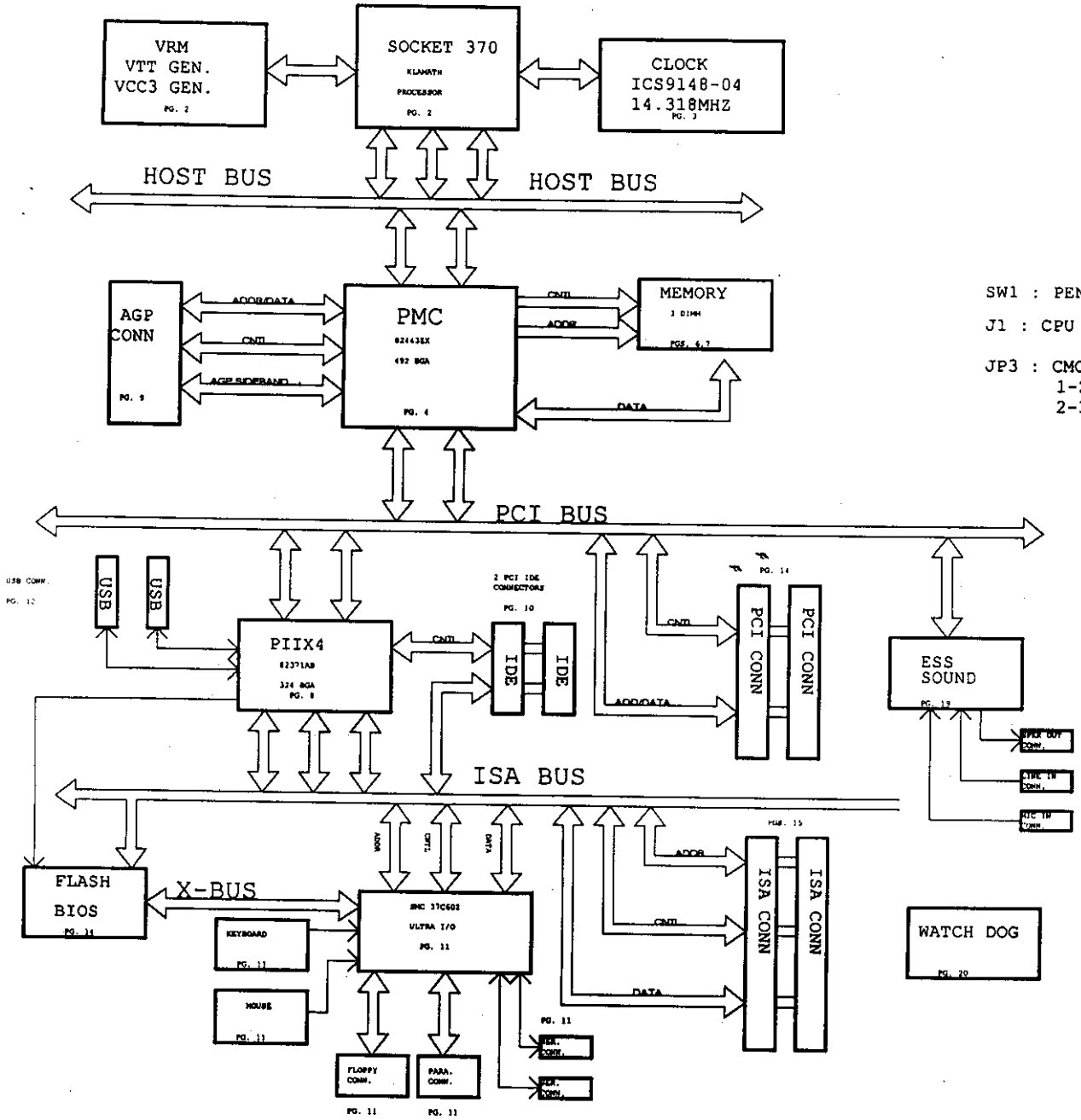

SW1 : PENTIUM-II CPU SPEED SETTING

J1 : CPU FAN POWER CON.

JP3 : CMOS DATA CLEAR
1-2 : DEFAULT CLOSE
2-3 : CLEAR CMOS DATA

MZ61S/MV61S

Ver:0.9

ATX

3DIMM
SUPPORTS 1 AGP SLOT
SUPPORTS 4 PCI SLOTS
SUPPORTS 2 ISA SLOTS

MEC

Title	ZX/VIA+ESS BASED MB
Size: Custom	Document Number: MEC R&D
Rev	0.9
Date: Wednesday, March 18, 1998	Sheet 1 of 21

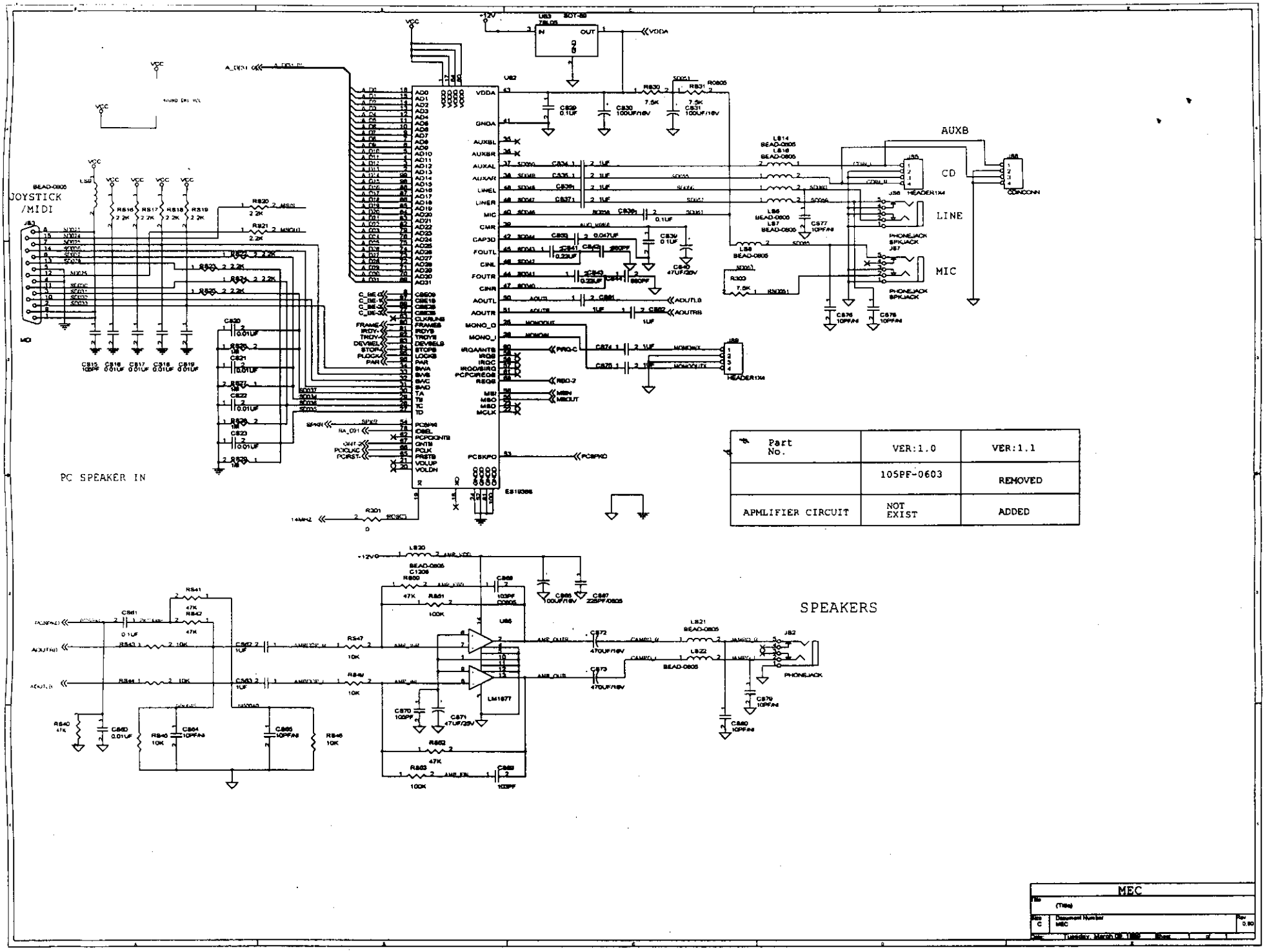

Part No.	VER:1.0	VER:1.1
	105PF-0603	REMOVED
APMLIFIER CIRCUIT	NOT EXIST	ADDED

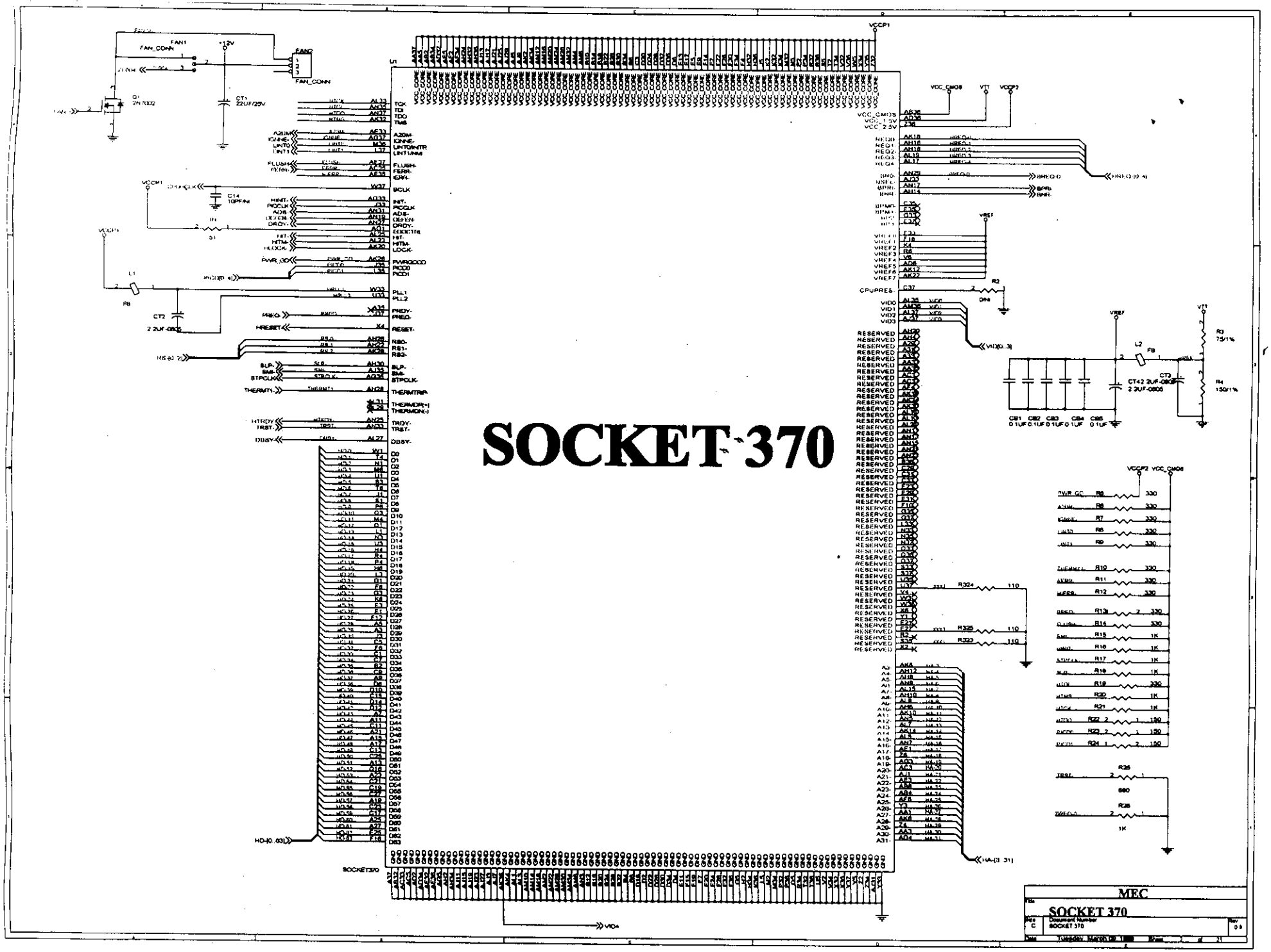
SOCKET 370
MEC
SOCKET 370
Document Number
SOCKET 370
Tuesday, March 06, 1999

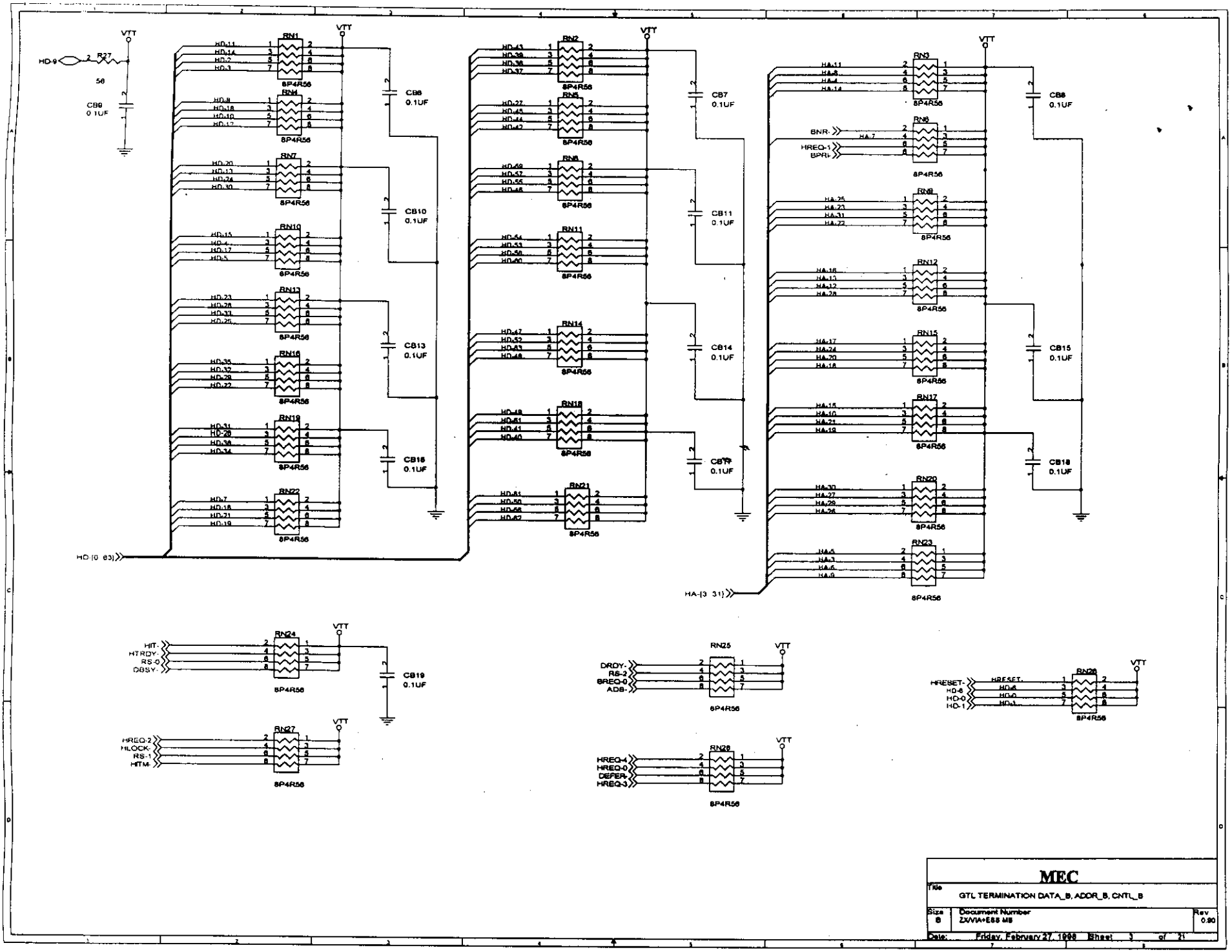
VTT
HD-9
R27
56
CB9
0.1UF
RN1
RN2
RN3
RN4
RN5
RN6
RN7
RN8
RN9
RN10
RN11
RN12
RN13
RN14
RN15
RN16
RN17
RN18
RN19
RN20
RN21
RN22
RN23
8P4R56
CB6
CB7
CB8
CB10
CB11
CB13
CB14
CB15
CB16
CB17
CB18
0.1UF
HD-[0 63]
HA-[3 31]
BNR-
HREQ-1
BPRI-
RN24
RN25
RN26
RN27
RN28
HIT-
HITRDY-
RS-0
DBSY-
DRDY-
RS-2
BREQ-0
ADS-
HRESET-
HD-6
HD-0
HD-1
HREQ-2
HLOCK-
RS-1
HITM-
HREQ-4
HREQ-0
DEFER-
HREQ-3
CB19
MEC
Title
GTL TERMINATION DATA_B, ADDR_B, CNTL_B
Size
B
Document Number
ZX/VIA+ESS MB
Rev
0.90
Date:
Friday, February 27, 1998
Sheet
3
of
21

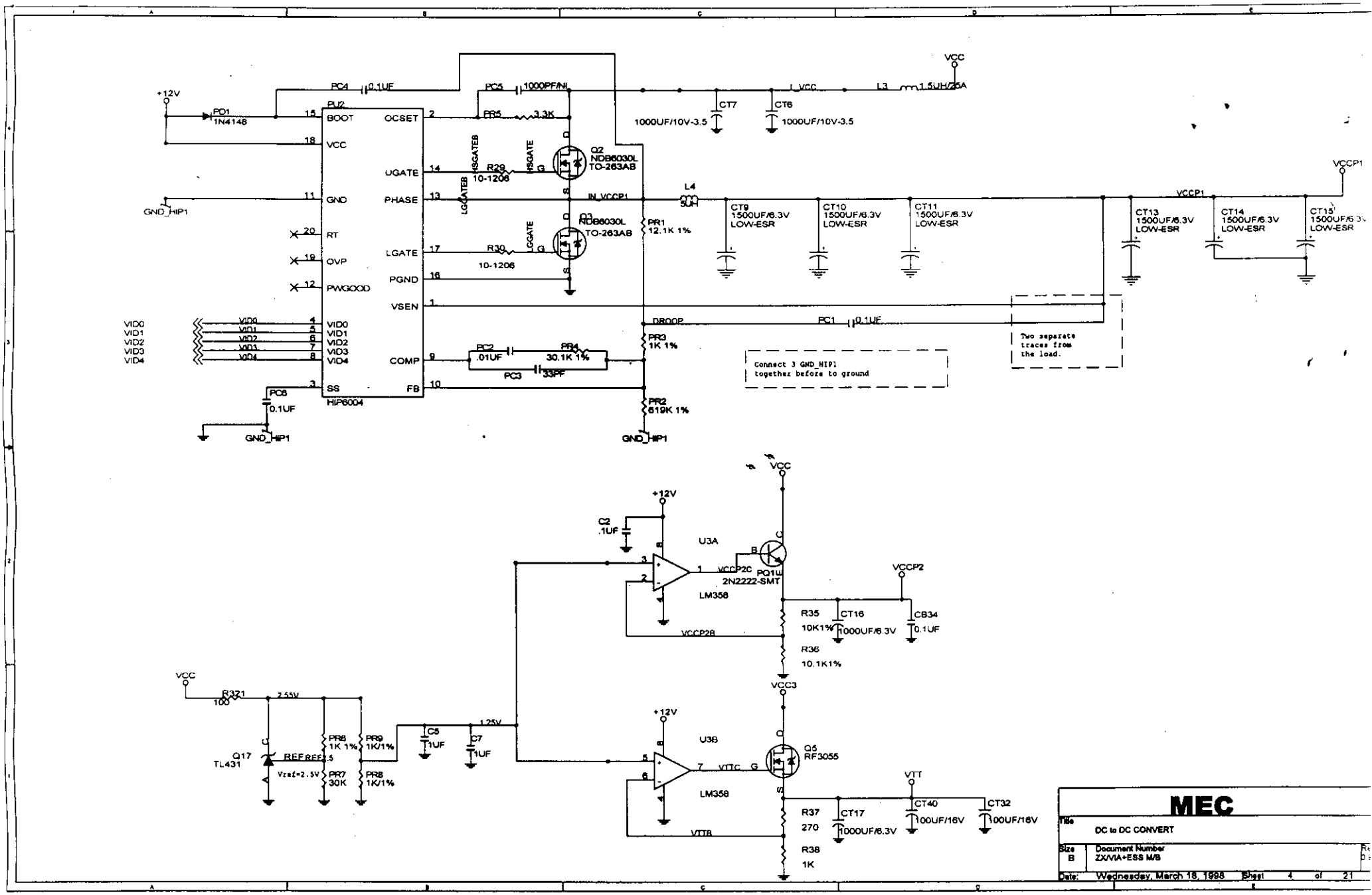
+12V
PD1
1N4148
PC4 0.1UF
PC5 1000PF/NI
PU2
BOOT
VCC
GND
RT
OVP
PWGOOD
OCSET
UGATE
PHASE
LGATE
PGND
VSEN
COMP
FB
SS
HIP6004
PR5 3.3K
R29 10-1206
R30 10-1206
HSGATEB
HSGATE
LGATEB
LGATE
Q2 NDB6030L TO-263AB
Q3 NDB6030L TO-263AB
IN_VCCP1
L4 5UH
PR1 12.1K 1%
PR3 1K 1%
PR2 619K 1%
DROOP
PC1 0.1UF
PC2 .01UF
PR4 30.1K 1%
PC3 33PF
PC6 0.1UF
GND_HIP1
VID0
VID1
VID2
VID3
VID4
CT7 1000UF/10V-3.5
CT6 1000UF/10V-3.5
I_VCC
L3 1.5UH/25A
VCC
CT9 1500UF/6.3V LOW-ESR
CT10 1500UF/6.3V LOW-ESR
CT11 1500UF/6.3V LOW-ESR
VCCP1
CT13 1500UF/6.3V LOW-ESR
CT14 1500UF/6.3V LOW-ESR
CT15 1500UF/6.3V LOW-ESR
Two separate traces from the load.
Connect 3 GND_HIP1 together before to ground
C2 .1UF
U3A
LM358
VCCP2C
PQ1u 2N2222-SMT
VCCP2B
VCCP2
R35 10K1%
CT16 1000UF/6.3V
CB34 0.1UF
R36 10.1K1%
VCC3
U3B
VTTC
Q5 RF3055
VTTB
VTT
R37 270
CT17 1000UF/6.3V
CT40 100UF/16V
CT32 100UF/16V
R38 1K
R321 100
2.55V
Q17 TL431
REFREF2.5
Vref=2.5V
PR6 1K 1%
PR7 30K
PR9 1K/1%
PR8 1K/1%
C5 1UF
C7 1UF
1.25V
MEC
Title DC to DC CONVERT
Size B
Document Number ZX/VIA+ESS M/B
Date: Wednesday, March 18, 1998
Sheet 4 of 21

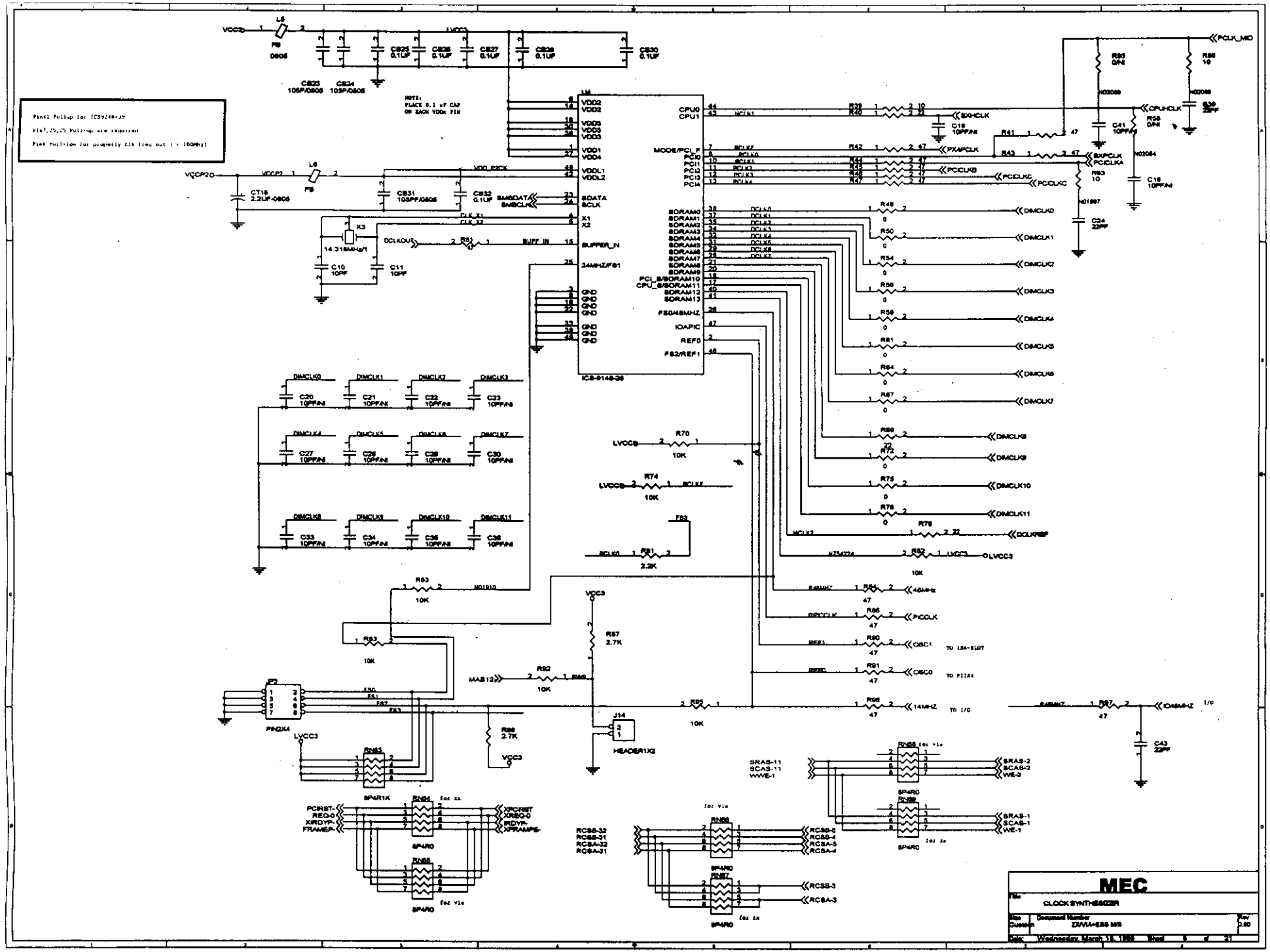
Pin41 Pullup for ICS9248-39
Pin7,25,29 Pullup are required
Pin4 Pull-low for properly clk freq out (< 100MHz)
NOTE:
PLACE 0.1 uF CAP
ON EACH VDDx PIN
ICS-9148-39
CPU0
CPU1
MODE/PCI_F
PCI0
PCI1
PCI2
PCI3
PCI4
SDRAM0
SDRAM1
SDRAM2
SDRAM3
SDRAM4
SDRAM5
SDRAM6
SDRAM7
SDRAM8
SDRAM9
PCI_S/SDRAM10
CPU_S/SDRAM11
SDRAM12
SDRAM13
FS0/48MHZ
IOAPIC
REF0
FS2/REF1
VDD2
VDD3
VDD1
VDD4
VDDL1
VDDL2
SDATA
SCLK
X1
X2
BUFFER_IN
24MHZ/FS1
GND
CPUHCLK
PCLK_MID
PXAPCLK
PCICLKB
PCICLKC
DIMCLK0
DIMCLK1
DIMCLK2
DIMCLK3
DIMCLK4
DIMCLK5
DIMCLK6
DIMCLK7
DIMCLK8
DIMCLK9
DIMCLK10
DIMCLK11
DCLKREF
LVCC3
48MHz
PICCLK
OSC1
OSC0
14MHZ
IO48MHZ
TO 13A-SLOT
TO PIIX4
TO I/O
SRAS-11
SCAS-11
WWE-1
SRAS-2
SCAS-2
WE-2
SRAS-1
SCAS-1
WE-1
RCSB-32
RCSB-31
RCSA-32
RCSA-31
RCSB-5
RCSB-4
RCSA-5
RCSA-4
RCSB-3
RCSA-3
PCIRST-
REQ-0
XIRDYP-
FRAMEP-
XPCIRST
XREQ-0
IRDYP-
XFRAMEP-
MEC
CLOCK SYNTHESIZER
Wednesday, March 18, 1998

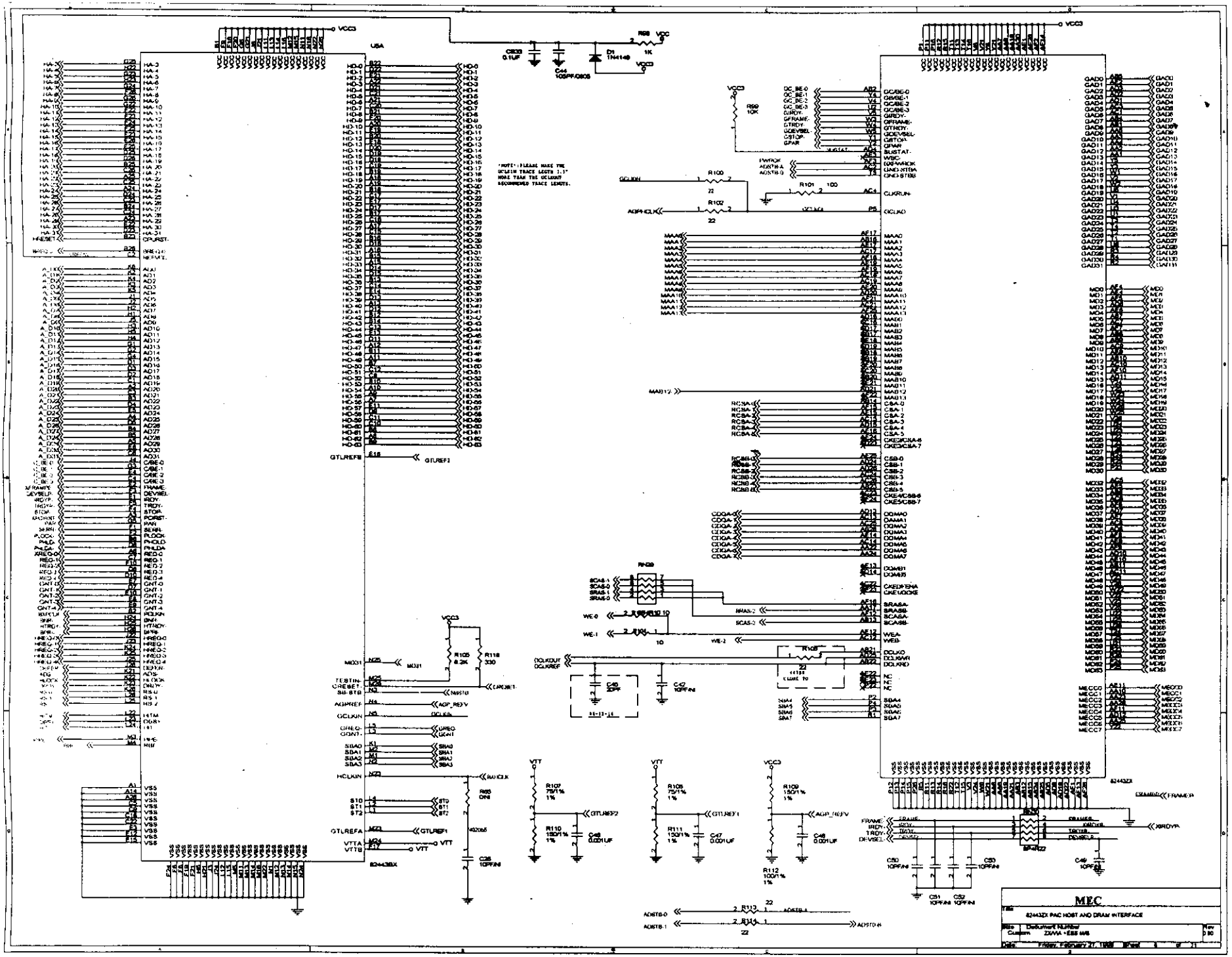
MEC
82443ZX PAC HOST AND DRAM INTERFACE
Document Number
Custom
ZAVA -EBB MB
Rev
0.90
Friday, February 27, 1998
Sheet 3 of 21
U8A
82443BX
82443ZX
VCC3
VTT
VSS
GTLREFB
GTLREFA
GTLREF1
GTLREF2
HCLKIN
SCLKIN
CLKRUN-
GCLKO
MAA12
MD31
TESTIN-
CRESET-
AGPREF
AGP_REFV
GREQ-
GGNT-
SBA0
SBA1
SBA2
SBA3
ST0
ST1
ST2
VTTA
VTTB
WE-0
WE-1
WE-2
DQLKOUT
DQLKREF
DQLKO
DQLKIN
DQLKIO
SBA4
SBA5
SBA6
SBA7
FRAME-
IRDY-
TRDY-
DEVSEL-
FRAMEA
IRDYA
R68
1K
D1
1N4148
C44
100PF/0805
C839
0.1UF
R99
10K
R100
22
R101
100
R102
22
R105
6.2K
R118
330
R107
75/1%
1%
R110
150/1%
1%
R108
150/1%
1%
R111
150/1%
1%
R109
150/1%
1%
R112
100/1%
1%
C46
0.001UF
C47
0.001UF
C48
0.001UF
C36
10PF/N
C42
10PF/N
C40
20PF
C50
10PF/N
C51
10PF/N
C52
10PF/N
C49
10PF/N
R113
22
R114
22
ADSTB-0
ADSTB-1
ADSTB-A
ADSTB-B
RN29
RN22
RP-R22
NOTE: PLEASE MAKE THE SCLKIN TRACE LESS 1.1" MORE THAN THE CCLKOUT RECOMMENDED TRACE LENGTH.

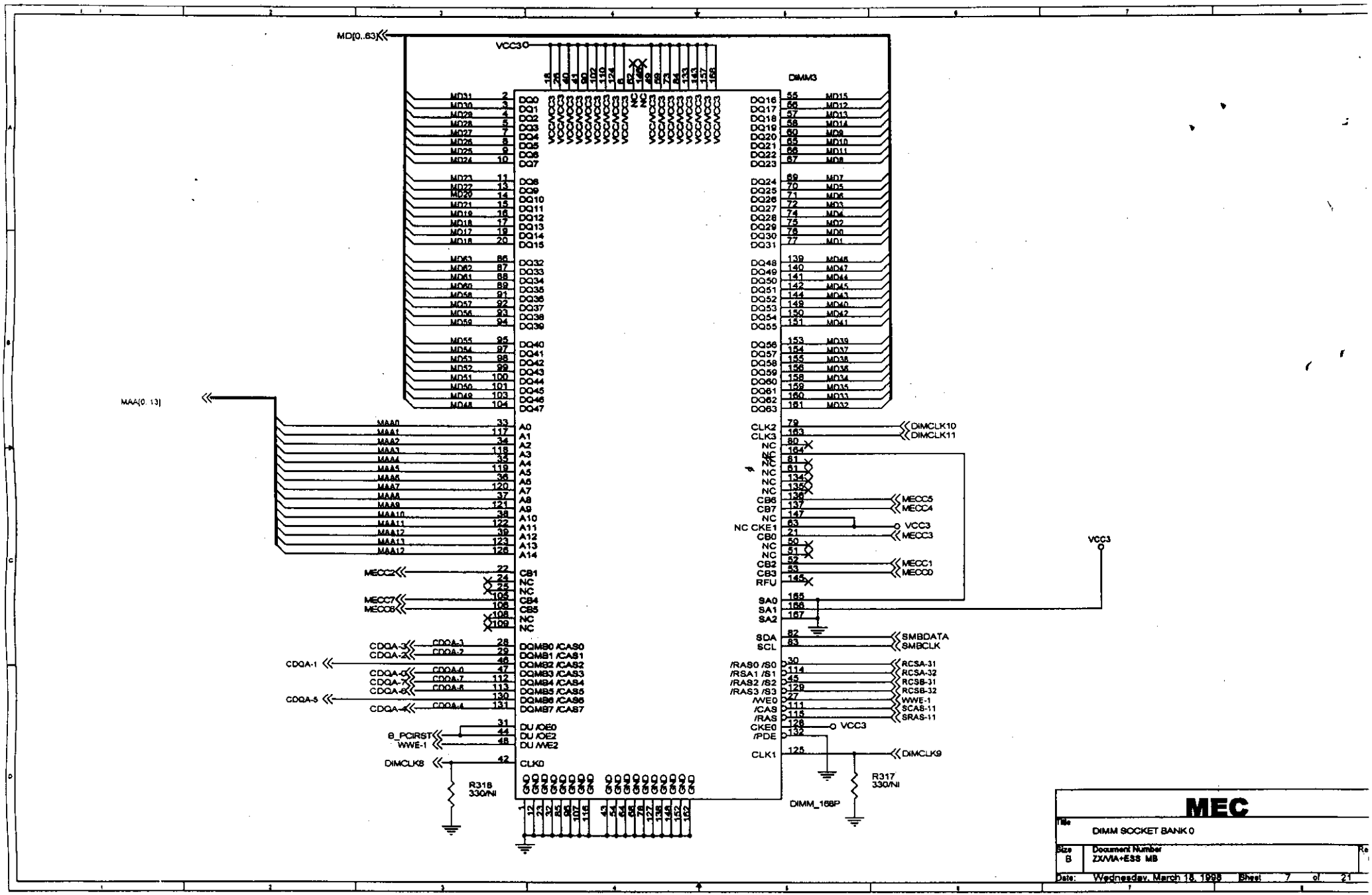
MD[0..63]
VCC3
DIMM3
MAA[0..13]
MECC2
MECC7
MECC6
CDQA-3
CDQA-2
CDQA-1
CDQA-0
CDQA-7
CDQA-6
CDQA-5
CDQA-4
B_PCIRST
WWE-1
DIMCLK8
R318
330/NI
DIMCLK10
DIMCLK11
MECC5
MECC4
MECC3
MECC1
MECC0
SMBDATA
SMBCLK
RCSA-31
RCSA-32
RCSB-31
RCSB-32
WWE-1
SCAS-11
SRAS-11
DIMCLK9
R317
330/NI
DIMM_168P
MEC
DIMM SOCKET BANK 0
Size
B
Document Number
ZX/VIA+ESS MB
Date: Wednesday, March 18, 1998
Sheet 7 of 21

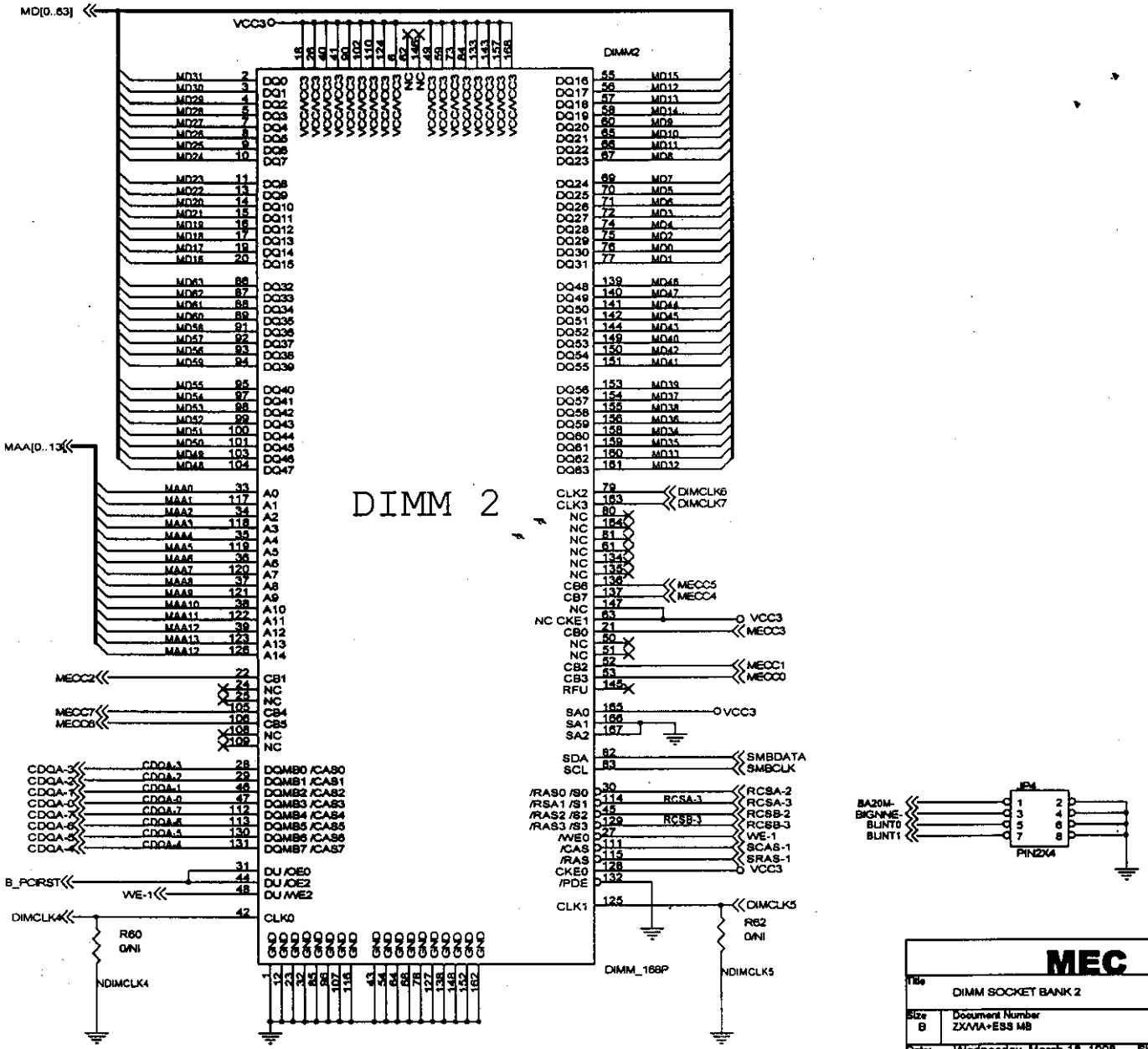
DIMM 2
DIMM2
DIMM_168P
MD[0..63]
MAA[0..13]
VCC3
DIMCLK6
DIMCLK7
MECC5
MECC4
MECC3
MECC1
MECC0
SMBDATA
SMBCLK
RCSA-2
RCSA-3
RCSB-2
RCSB-3
WE-1
SCAS-1
SRAS-1
DIMCLK5
MECC2
MECC7
MECC6
CDQA-3
CDQA-2
CDQA-1
CDQA-0
CDQA-7
CDQA-6
CDQA-5
CDQA-4
B_PCIRST
DIMCLK4
R60
0/NI
NDIMCLK4
R62
0/NI
NDIMCLK5
JP4
PIN2X4
BA20M-
BIGNNE-
BLINT0
BLINT1
MEC
DIMM SOCKET BANK 2
Size
B
Document Number
ZX/VIA+ESS MB
Date: Wednesday, March 18, 1998
Sheet 8 of 21

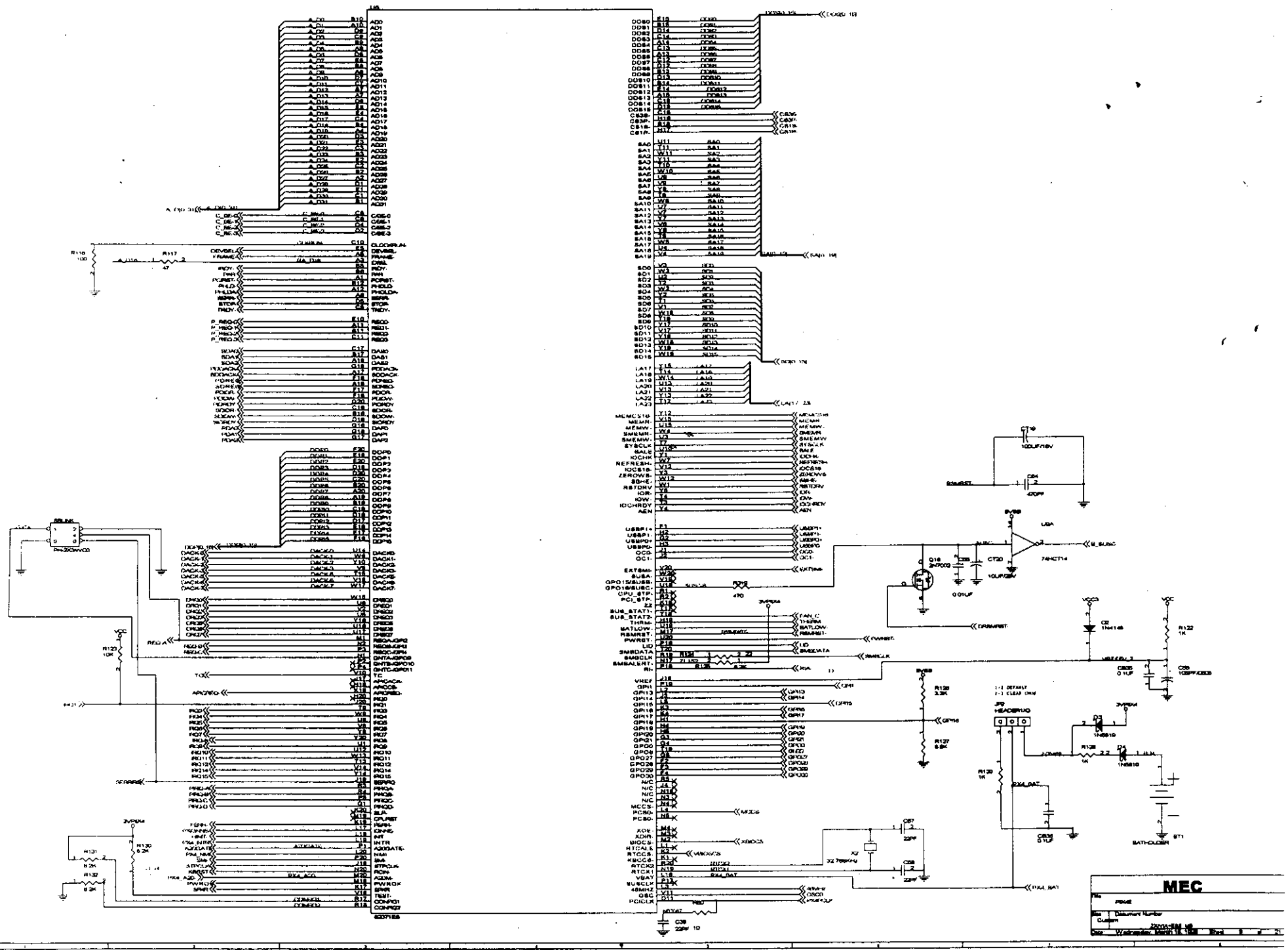
MEC

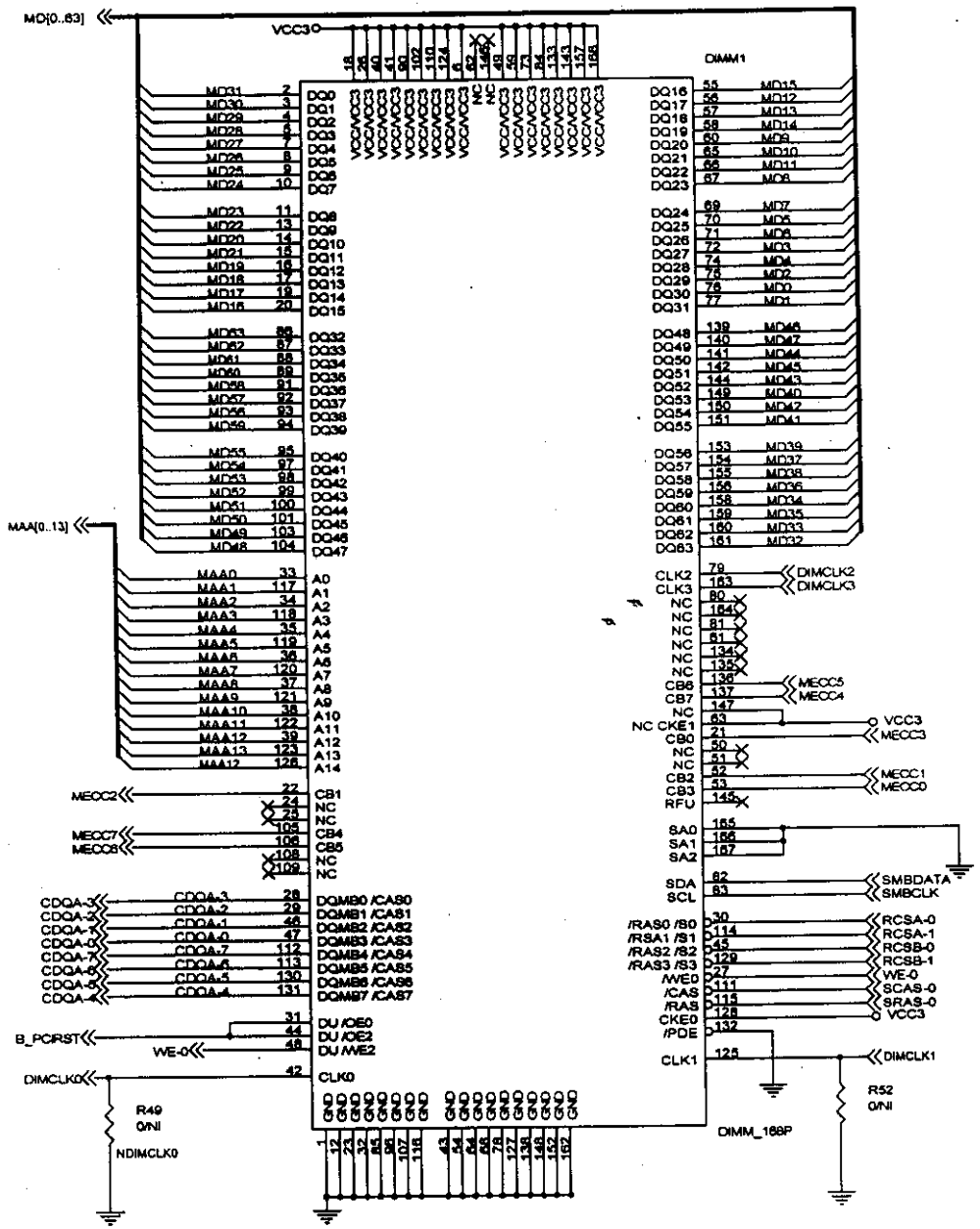

MEC

Title: DIMM SOCKET BANK 2

Size: B | Document Number: ZX/VIA+ESS MB | R

Date: Wednesday, March 18, 1998 | Sheet 10 of 21

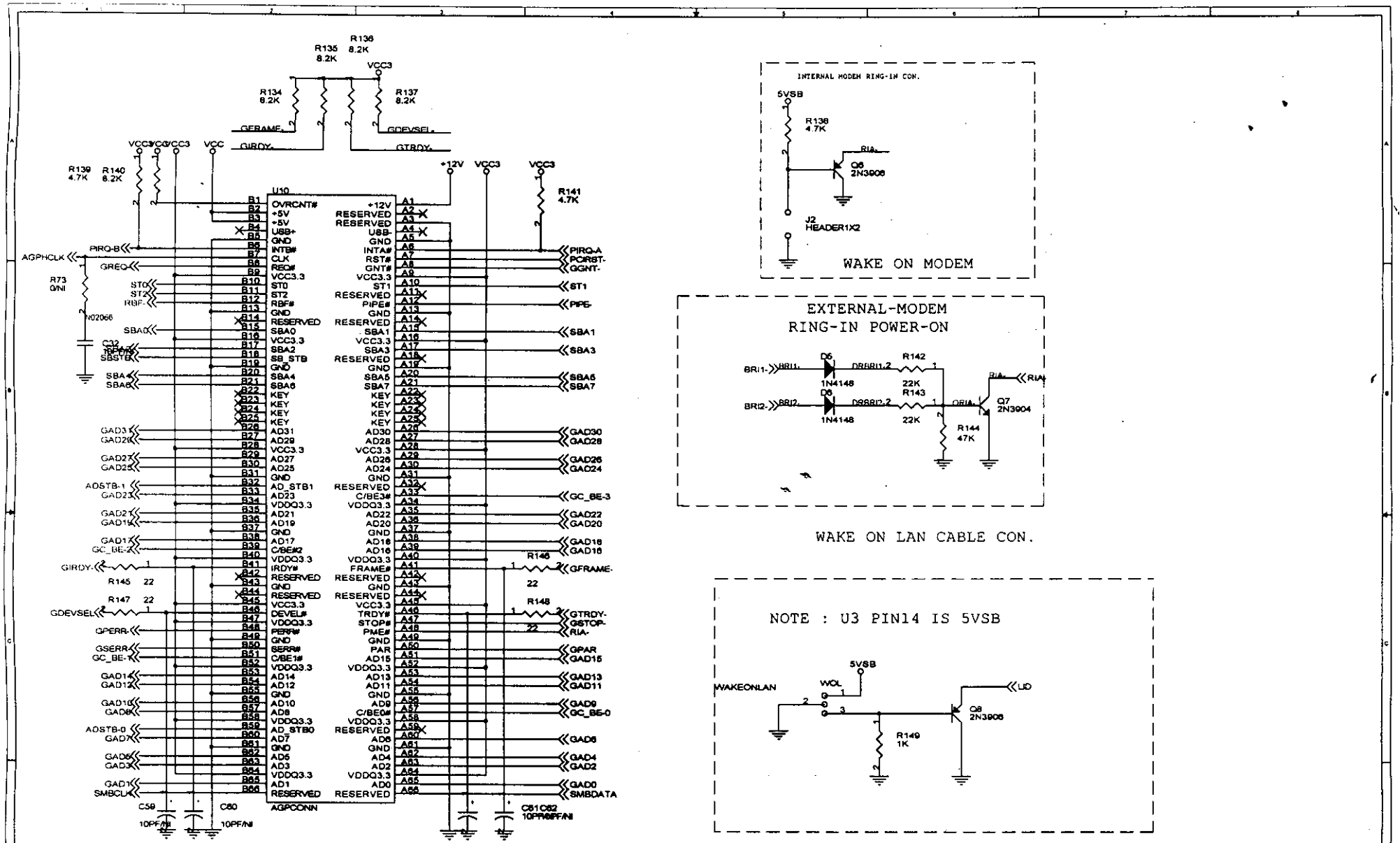
U10
AGPCONN
R134 8.2K
R135 8.2K
R136 8.2K
R137 8.2K
VCC3
GFRAME-
GIRDY-
GDEVSEL-
GTRDY-
R139 4.7K
R140 8.2K
R141 4.7K
R73 0/NI
N02066
C32
C59 10PF/NI
C60 10PF/NI
C61C62 10PF/NI
R145 22
R146 22
R147 22
R148 22
R149 1K
Q8 2N3906
LID
WAKEONLAN
WOL
5VSB
INTERNAL MODEM RING-IN CON.
R138 4.7K
J2 HEADER1X2
WAKE ON MODEM
EXTERNAL-MODEM
RING-IN POWER-ON
D5 1N4148
D6 1N4148
R142 22K
R143 22K
R144 47K
Q7 2N3904
WAKE ON LAN CABLE CON.
NOTE : U3 PIN14 IS 5VSB
MEC
AGP CONNECTOR
Size Custom
Document Number ZX/VIA+ESS MB
Rev 0.90
Date Wednesday, March 18, 1998
Sheet 11 of 21

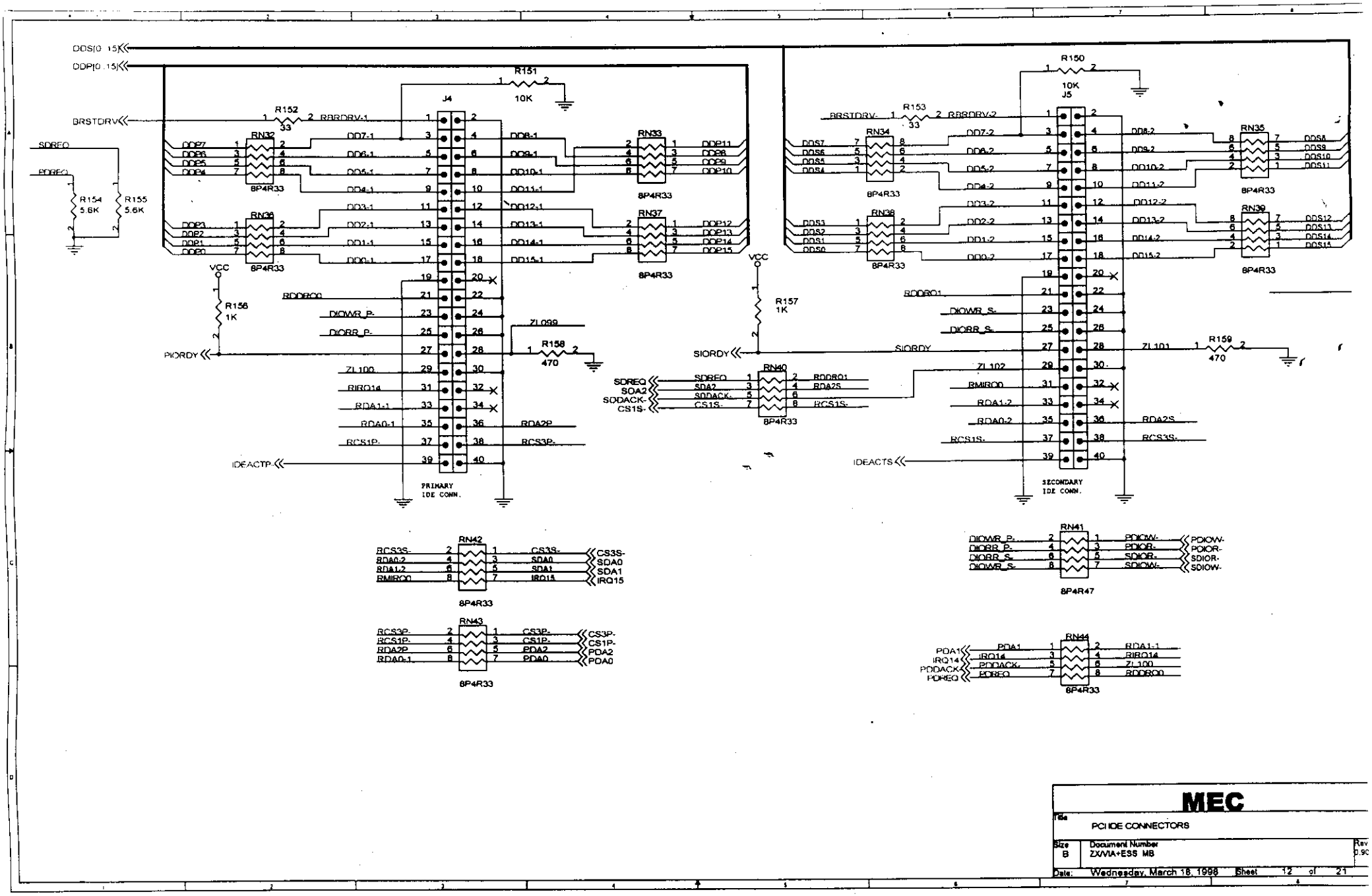

MEC

Title: PCI IDE CONNECTORS

Size: B | Document Number: ZX/VIA+ESS MB | Rev: 0.90

Date: Wednesday, March 18, 1998 | Sheet 12 of 21

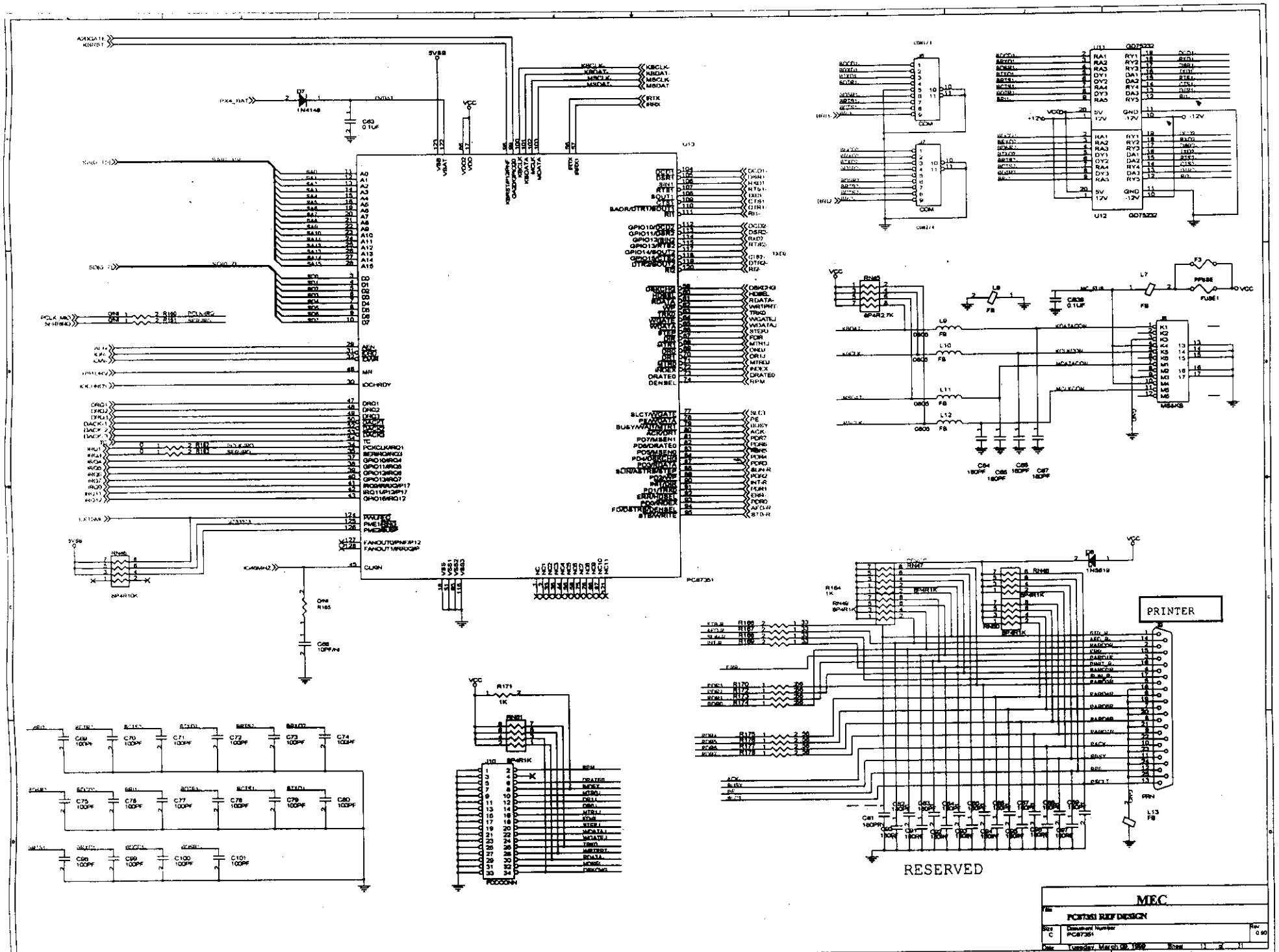
PRINTER
RESERVED
MEC
PC87351 REF DESIGN
Size C
Document Number PC87351
Rev 0.90
Date: Tuesday, March 09, 1999
Sheet 11 of 21

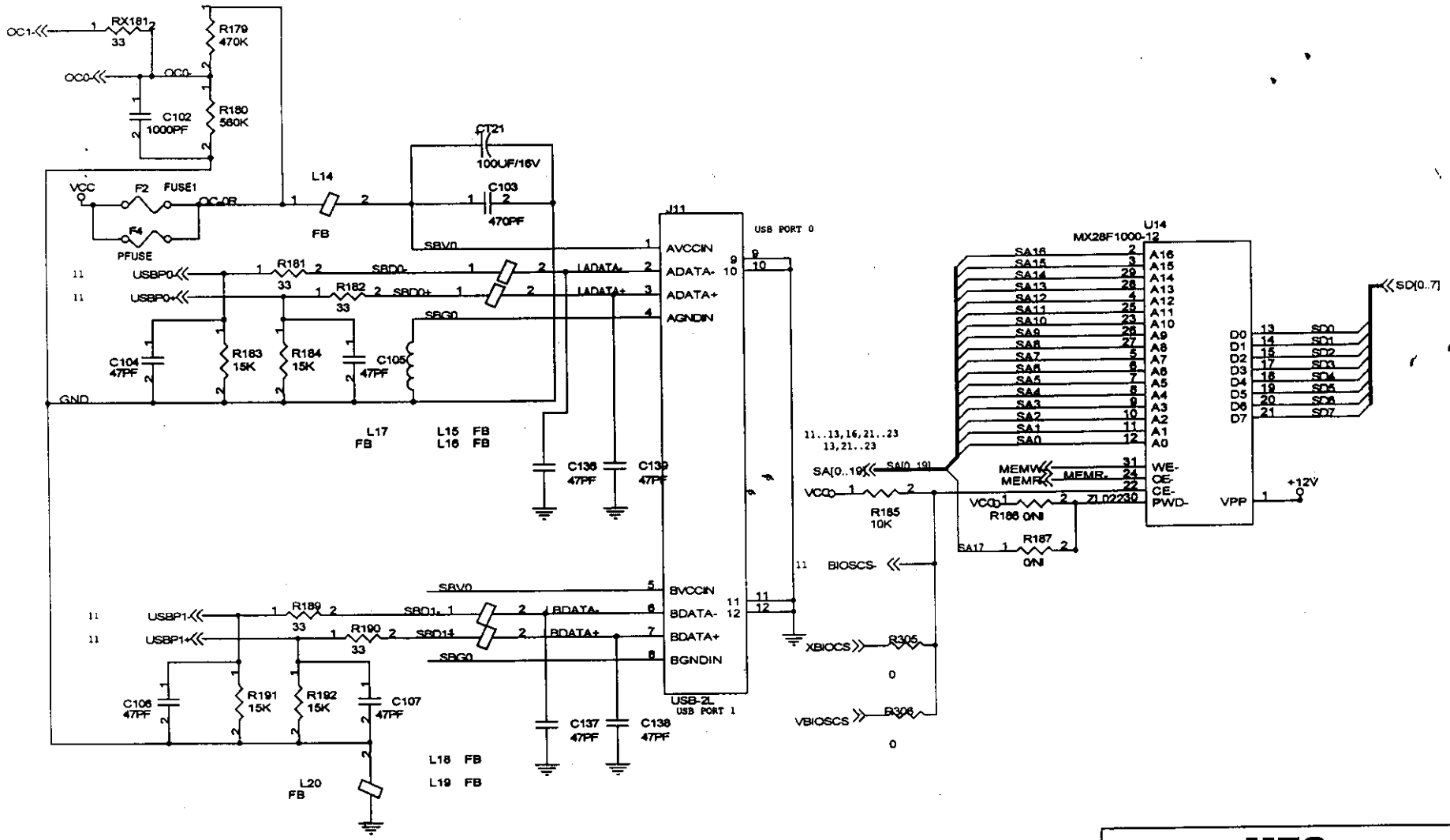

MEC

Title: USB PORT INTERFACES & BIOS

Size: Custom | Document Number: ZX/VIA+ESS MB

Date: Wednesday, March 18, 1998 | Sheet 14 of 21

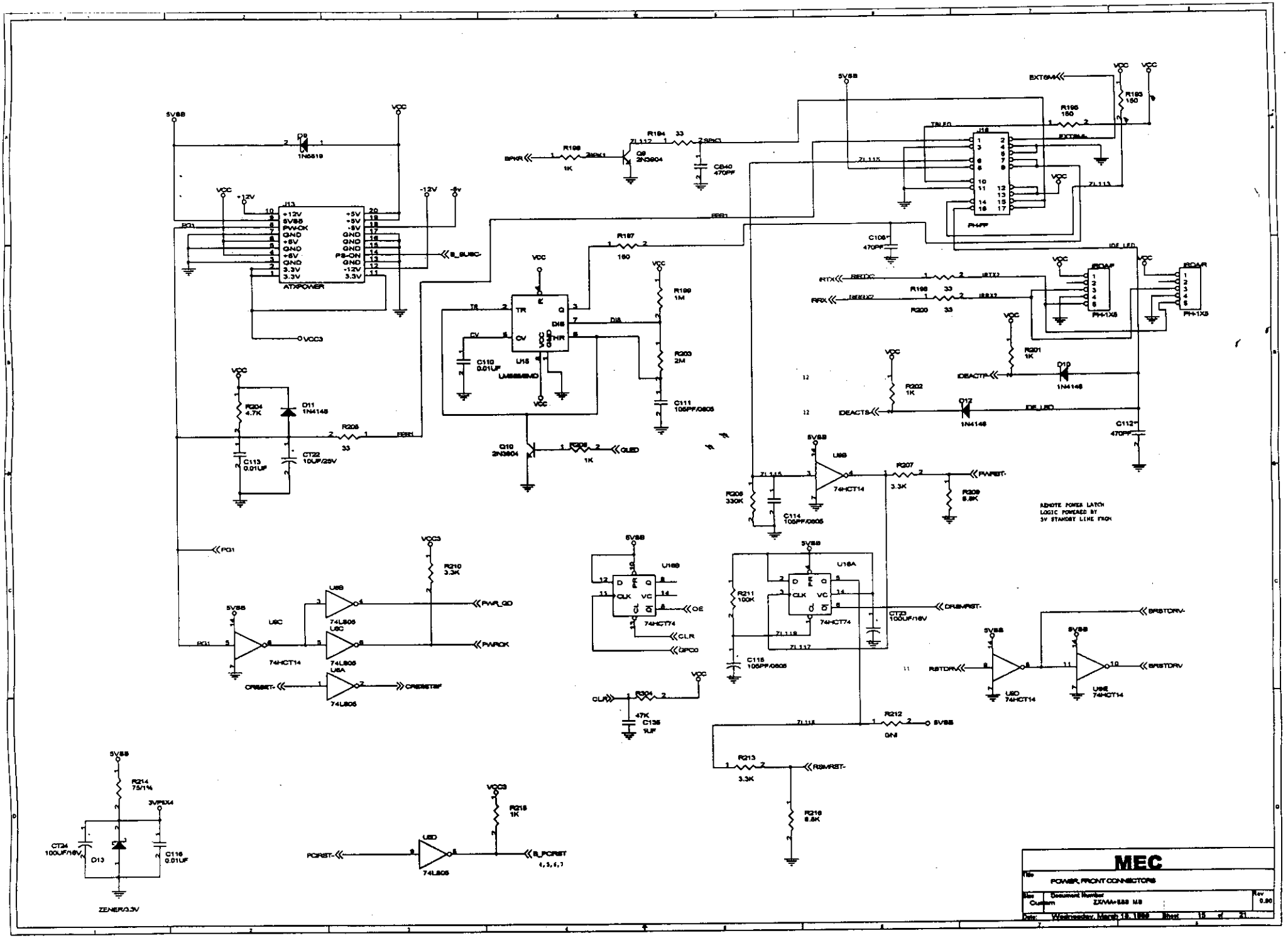
ATXPOWER
J13
+12V
5VSB
PWR-OK
GND
+5V
+3V
3.3V
PS-ON
-12V
U15
LM555MMD
U16
74HCT74
U18
PHFF
U89
74HCT14
U8B
74LS05
U8C
U8A
U8D
U8E
PH-1X5
IDEAF
IDEAR
IDEACTP
IDEACTS
IDE_LED
EXTSMI
PWRST-
DRSMRST-
RSMRST-
BRSTDRV-
BRSTDRV
PCRST-
B_PCRST
PWR_GD
PWROK
CRSBSET-
OE
CLR
DPCO
CLK
ZENER/3.3V
MEC
POWER, FRONT CONNECTORS
Document Number
Rev
Custom
Wednesday, March 18, 1998
Sheet 15 of 21

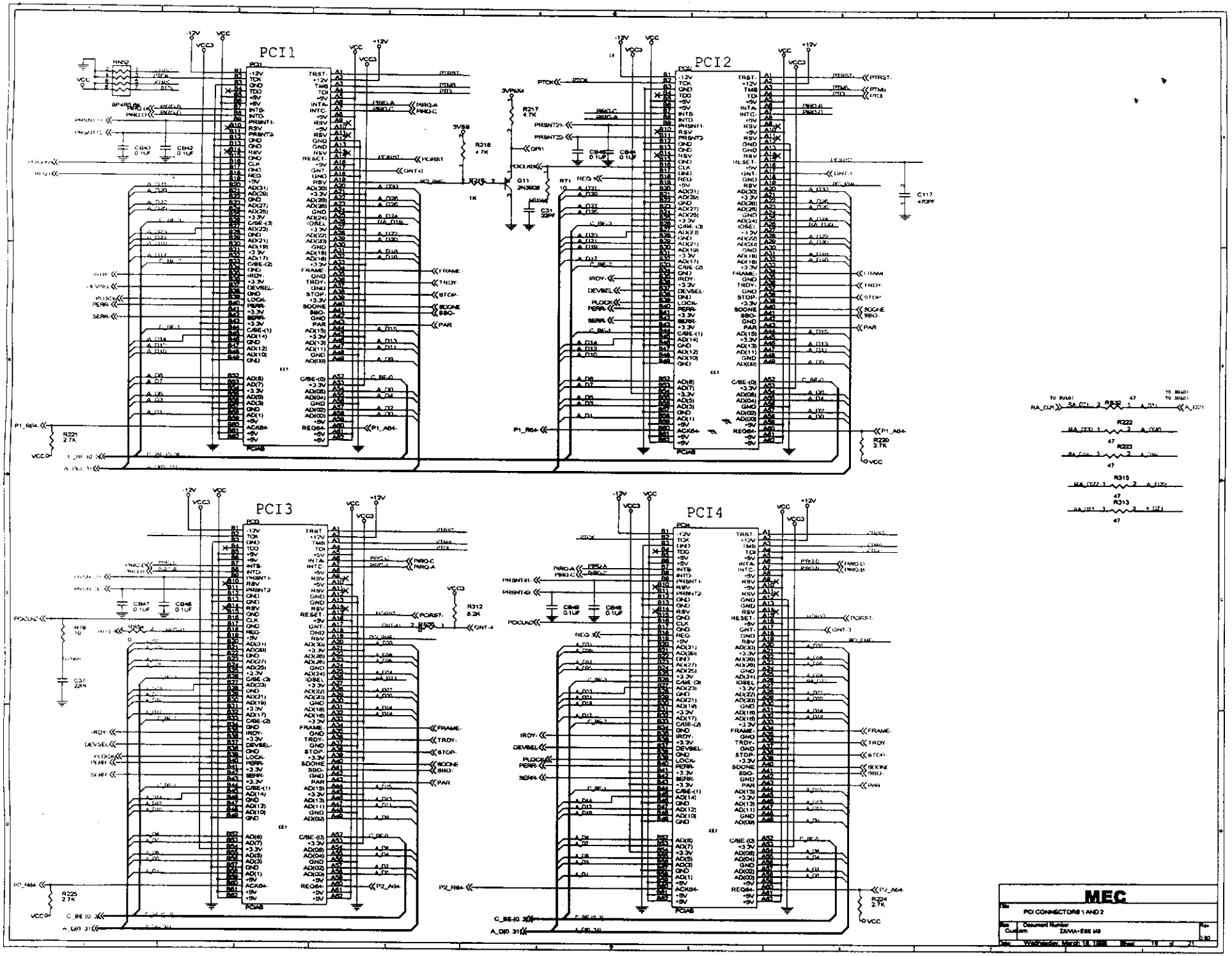
PCI1
PCI2
PCI3
PCI4
MEC
PCI CONNECTORS 1 AND 2

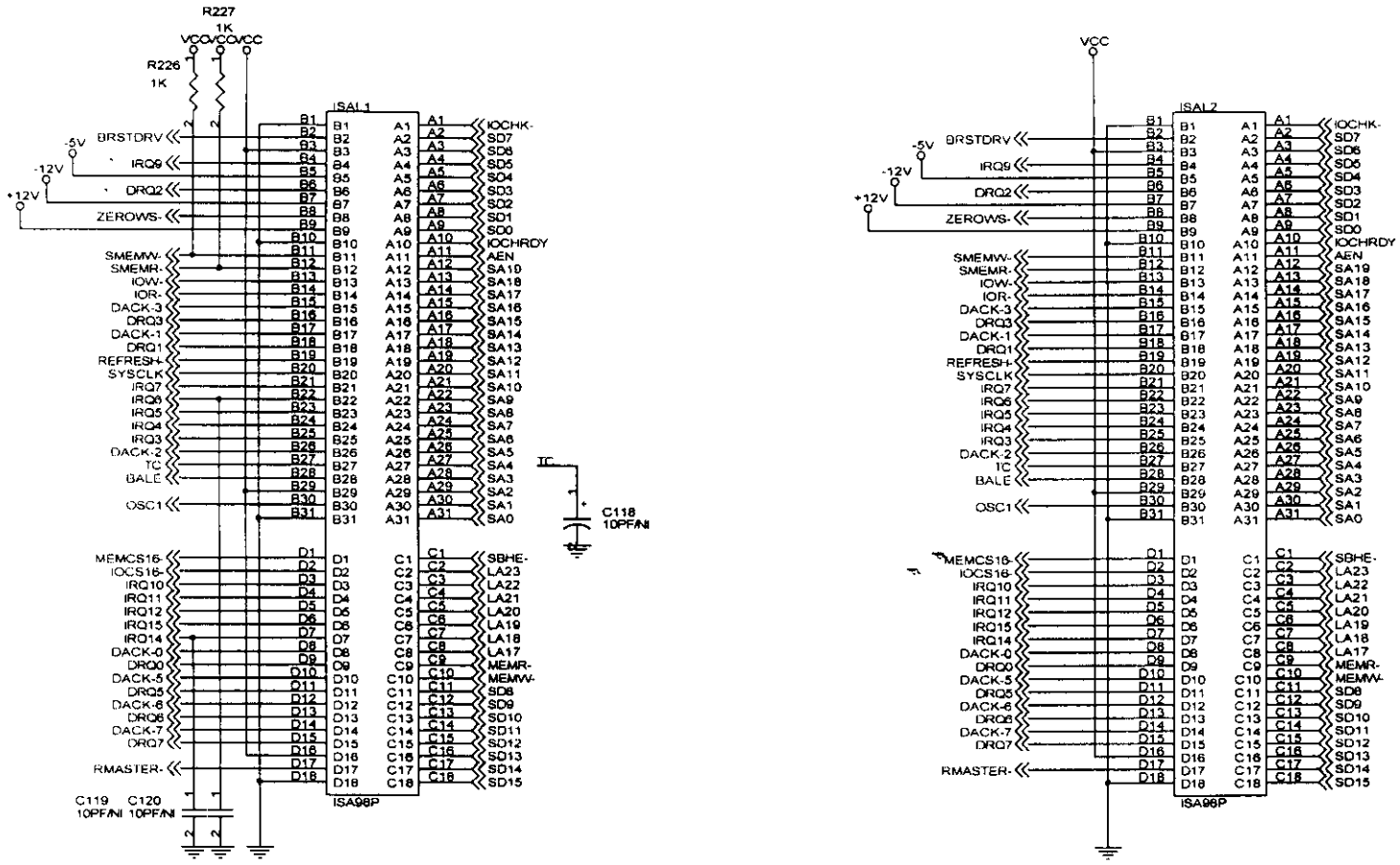

MEC

Title	ISA BUS SLOTS 1.2
Size B	Document Number ZX/VIA+ESS MB
Date: Wednesday, March 18, 1998	Sheet 17 of 21

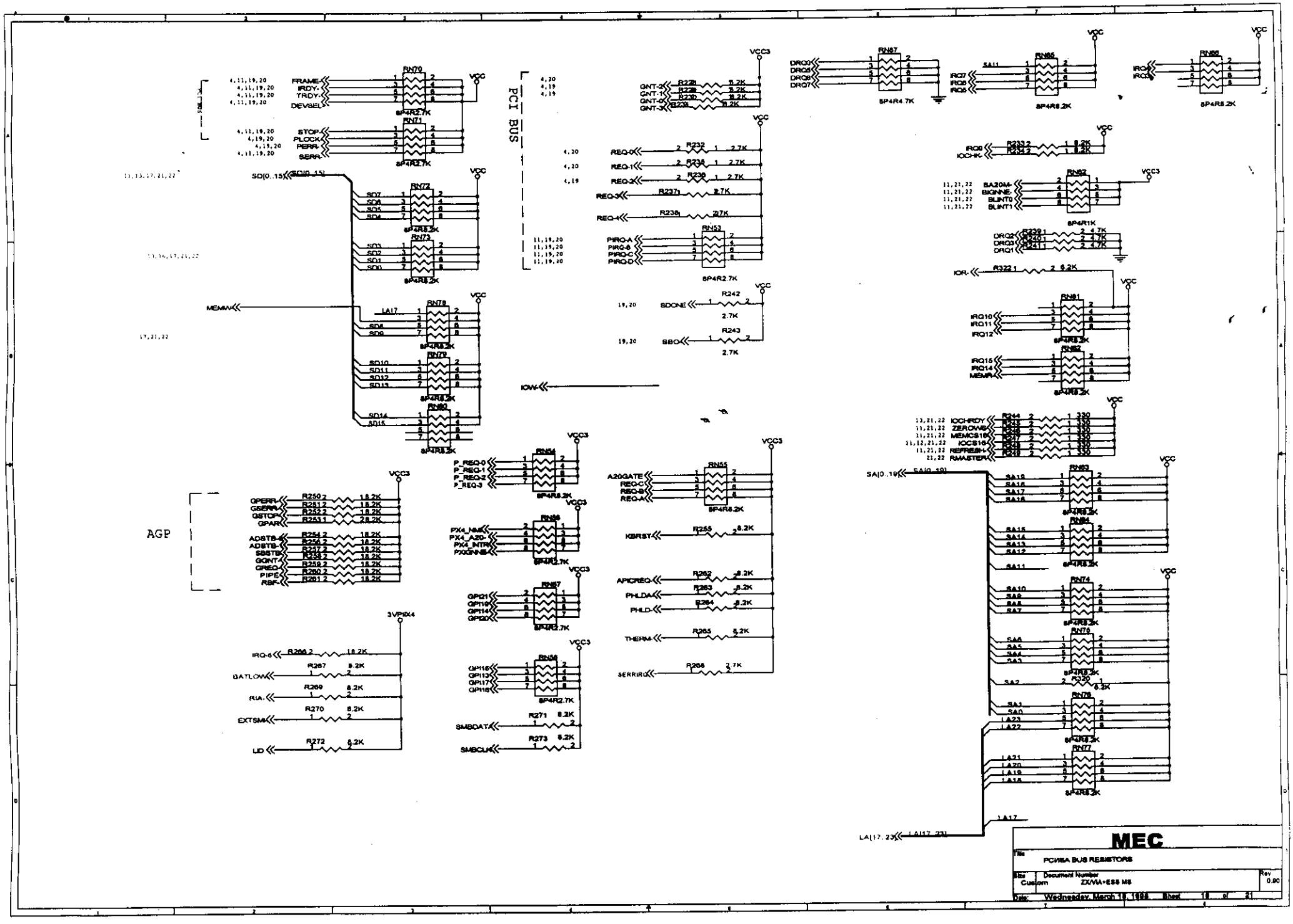
PCI BUS
AGP
FRAME-
IRDY-
TRDY-
DEVSEL-
STOP-
PLOCK-
PERR-
SERR-
SD[0..15]
MEMW-
IOW-
GNT-2
GNT-1
GNT-0
GNT-3
REQ-0
REQ-1
REQ-2
REQ-3
REQ-4
PIRQ-A
PIRQ-B
PIRQ-C
PIRQ-D
SDONE
SBO
P_REQ-0
P_REQ-1
P_REQ-2
P_REQ-3
A20GATE
REQ-C
REQ-B
REQ-A
KBRST-
APICREQ-
PHLDA-
PHLD-
THERM-
SERRIRQ
GPERR-
GSERR-
GSTOP-
GPAR
ADSTB-
ADSTB-
SBSTB-
GGNT-
GREQ-
PIPE-
RBF-
IRQ-6
BATLOW-
RIA-
EXTSMI-
LID
SMBDAT
SMBCLK
DRQ0
DRQ5
DRQ6
DRQ7
IRQ7
IRQ6
IRQ5
IRQ0
IOCHK-
BA20M-
BIGNNE-
BLINT0
BLINT1
DRQ2
DRQ3
DRQ1
IOR-
IRQ10
IRQ11
IRQ12
IRQ15
IRQ14
MEMR-
IOCHRDY
ZEROWS-
MEMCS16-
IOCS16-
REFRESH-
RMASTER-
SA[0..19]
LA[17..23]
VCC
VCC3
3VPIX4
8P4R2.7K
8P4R8.2K
8P4R4.7K
8P4R1K
MEC
PC/ISA BUS RESISTORS
Document Number
ZX/VIA+ESS MS
Rev
0.90
Wednesday, March 18, 1998
Sheet 18 of 21

BULK DECOUPLING

NEAR POWER CONNECTOR

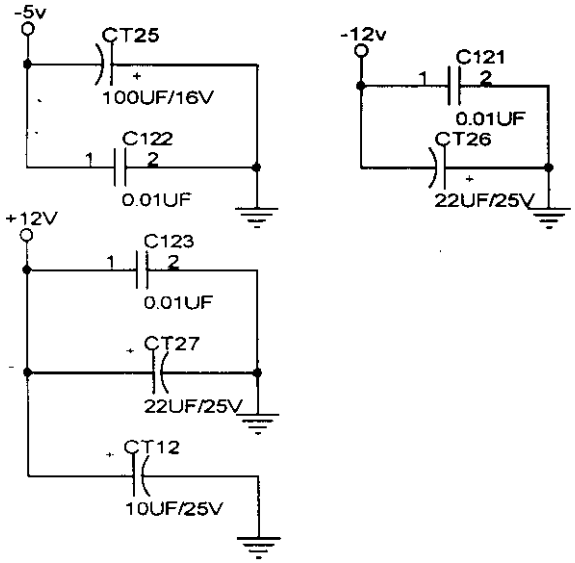

3 VOLT DECOUPLING

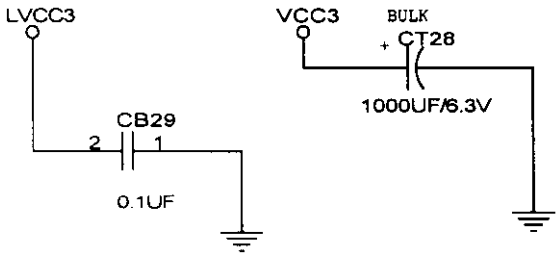

STANDBY 5 VOLT DECOUPLING

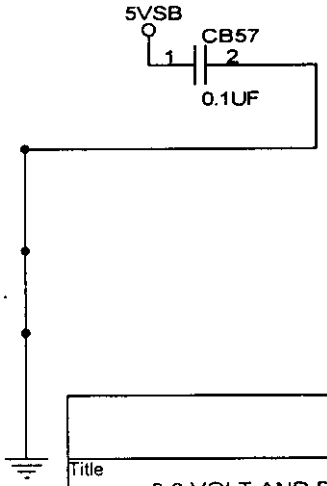

5 VOLT DECOUPLING

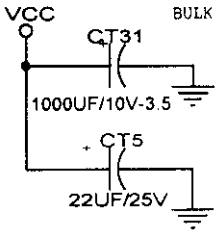

MEC

Title	3.3 VOLT AND BULK POWER DECOUPLING
Size: Custom	Document Number: ZX/VIA+ESS MB
Date: Wednesday, March 18, 1998	Sheet 19 of 21

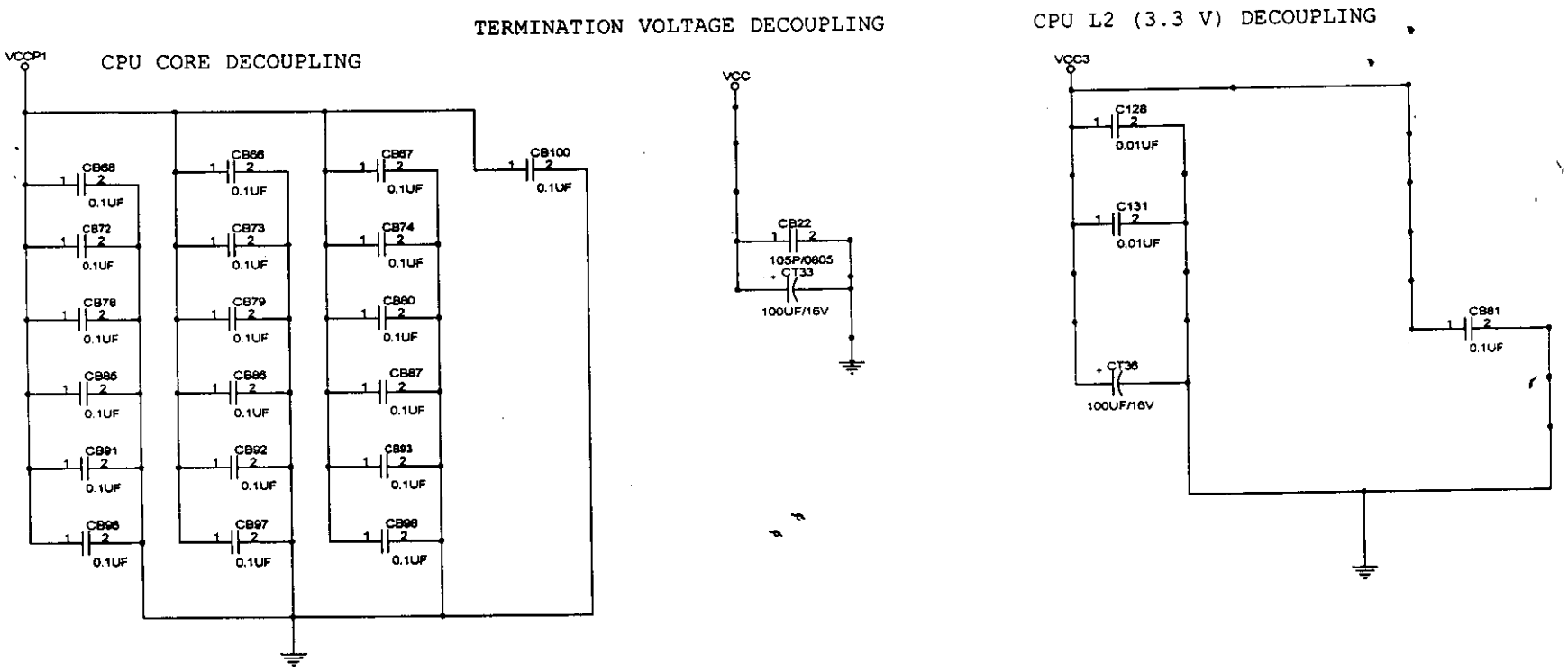

MEC	
Title	CPU DECOUPLING CAPACITORS
Size B	Document Number ZX/VIA+ESS MB
Date: Wednesday, March 18, 1998	Sheet 20 of 21

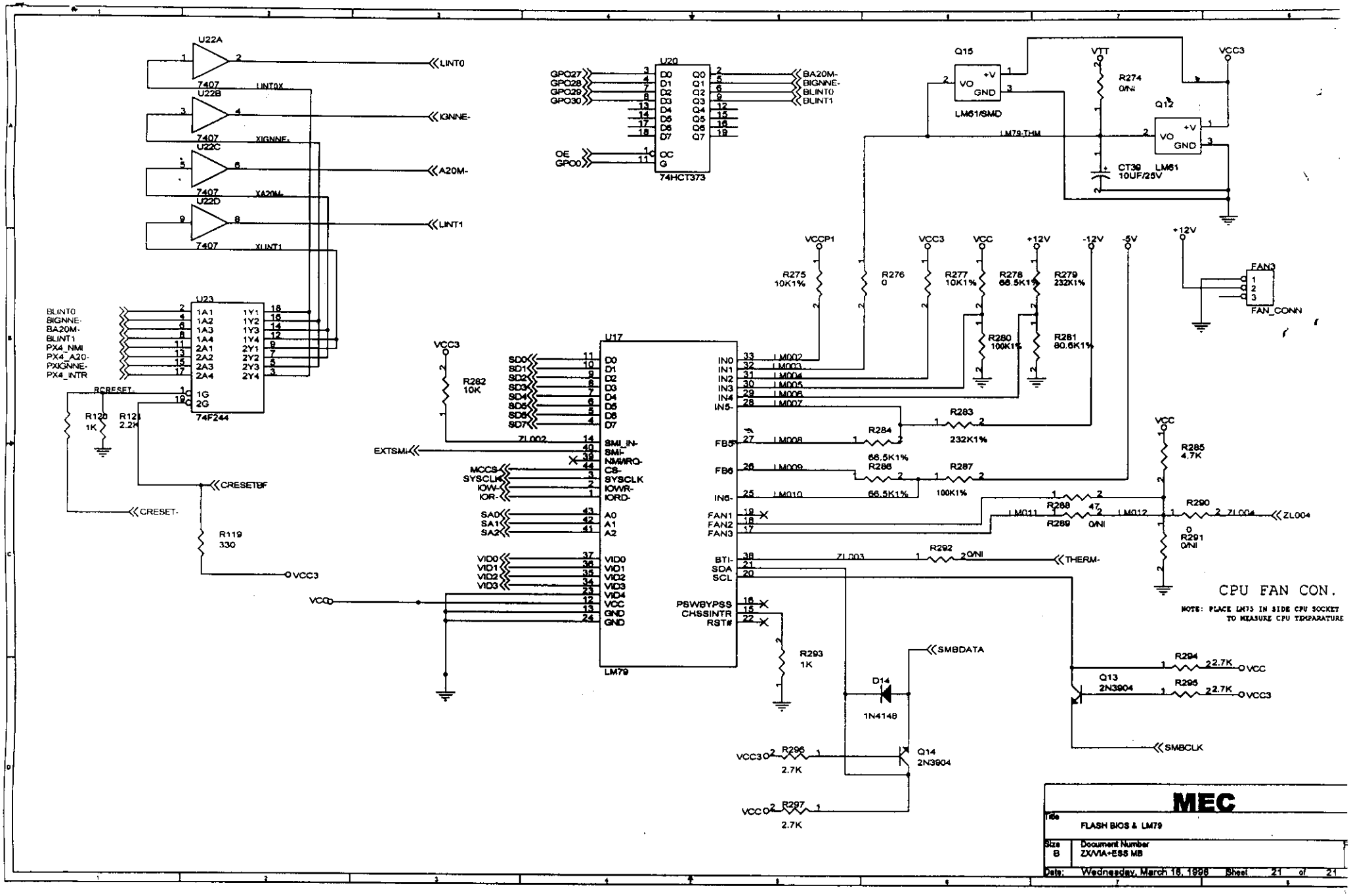
U22A
7407
LINT0
U22B
7407
XIGNNE-
IGNNE-
U22C
7407
XA20M-
A20M-
U22D
7407
XLINT1
LINT1
U20
74HCT373
GPO27
GPO28
GPO29
GPO30
OE
GPO0
BA20M-
BIGNNE-
BLINT0
BLINT1
Q15
LM61/SMD
VTT
VCC3
R274
0/NI
Q12
LM61
CT39
10UF/25V
LM79-THM
U23
74F244
BLINT0
BIGNNE-
BA20M-
BLINT1
PX4_NMI
PX4_A20-
PXIGNNE-
PX4_INTR
RCRESET-
R120
1K
R121
2.2K
CRESET-
CRESETBF
R119
330
VCC3
R282
10K
EXTSMI-
MCCS-
SYSCLK
IOW-
IOR-
SA0
SA1
SA2
VID0
VID1
VID2
VID3
VCC
U17
LM79
SD0
SD1
SD2
SD3
SD4
SD5
SD6
SD7
ZL002
SMI_IN-
SMI-
NMIIRQ-
CS-
SYSCLK
IOWR-
IORD-
A0
A1
A2
VID0
VID1
VID2
VID3
VID4
VCC
GND
GND
IN0
IN1
IN2
IN3
IN4
IN5-
FB5
FB6
IN6-
FAN1
FAN2
FAN3
BTI-
SDA
SCL
PSWBYPSS
CHSSINTR
RST#
LM002
LM003
LM004
LM005
LM006
LM007
LM008
LM009
LM010
LM011
LM012
ZL003
R275
10K1%
R276
0
R277
10K1%
R278
66.5K1%
R279
232K1%
R280
100K1%
R281
80.6K1%
R283
232K1%
R284
66.5K1%
R286
66.5K1%
R287
100K1%
R288
47
R289
0/NI
R290
0
R291
0/NI
R292
0/NI
R293
1K
D14
1N4148
SMBDATA
SMBCLK
Q14
2N3904
R296
2.7K
R297
2.7K
VCCP1
+12V
-12V
-5V
FAN3
FAN_CONN
R285
4.7K
ZL004
THERM-
CPU FAN CON.
NOTE: PLACE LM75 IN SIDE CPU SOCKET
TO MEASURE CPU TEMPARATURE
Q13
2N3904
R294
22.7K
R295
22.7K
VCC
VCC3
MEC
Title
FLASH BIOS & LM79
Size
B
Document Number
ZX/VIA+ESS MB
Date:
Wednesday, March 18, 1998
Sheet
21
of
21