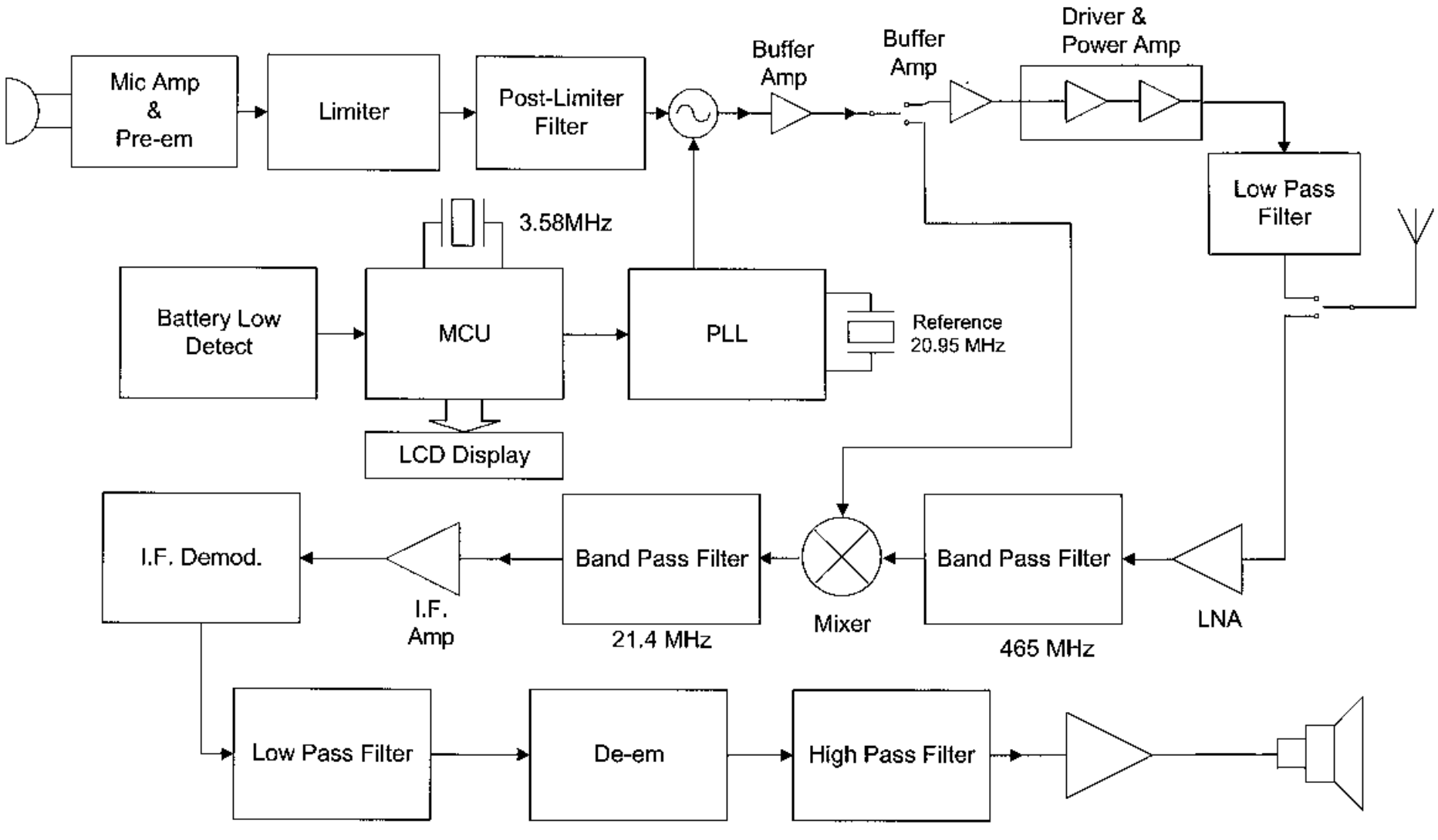

FRS Block Diagram