Dekolink WIRELESS Ltd.
16 Bazel St. Qiryat-Arieh Petah-Tikva, Israel, 49510
Tel- 972-3-9180-180 Fax-972-3- -
e-mail: marketing@dekolink.com web www.dekolink.com

BDA ESMR 50W90 BLOCK DIAGRAM

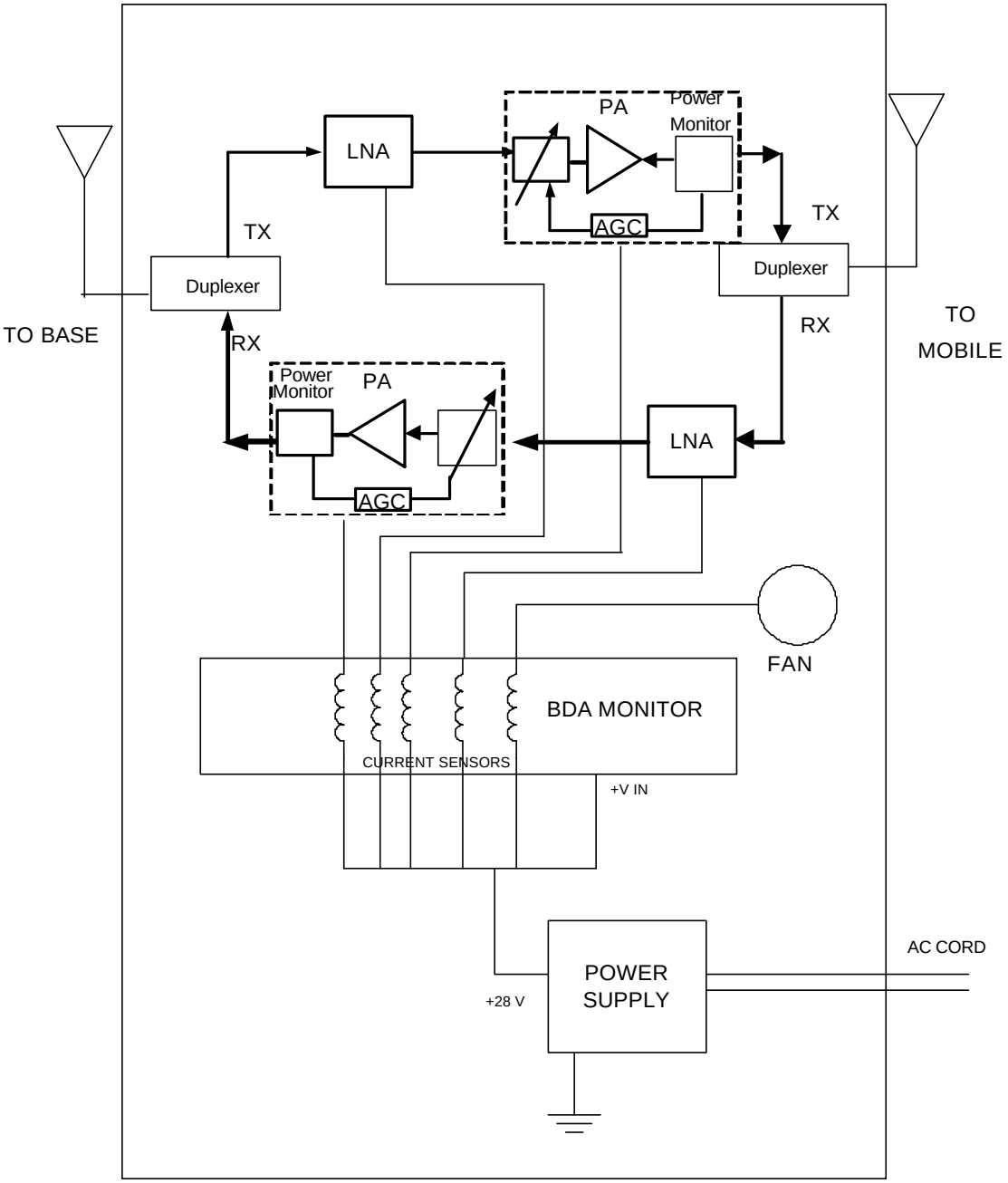

BDA-ESMR-50W90
ELELCTRICAL SCHEMATICS