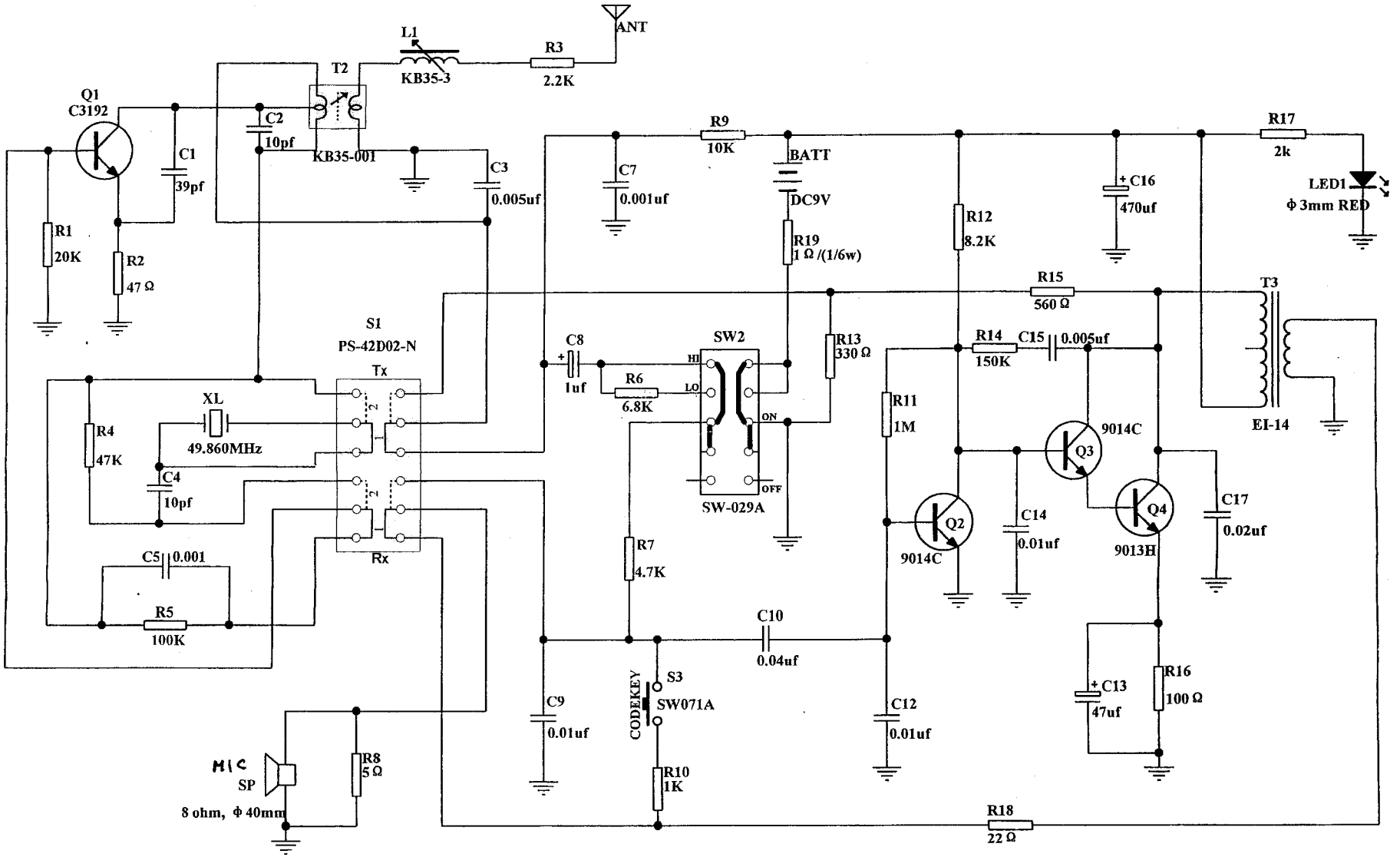

Title	CE-251 WALKIE TALKIE	
Size A4	Number	Revision A
Date: 22-Nov-2003	Sheet of	
File: C:\My Documents\线路原理图\CE251.DDB	Drawn By: SUNCO(CHINA EAST)	