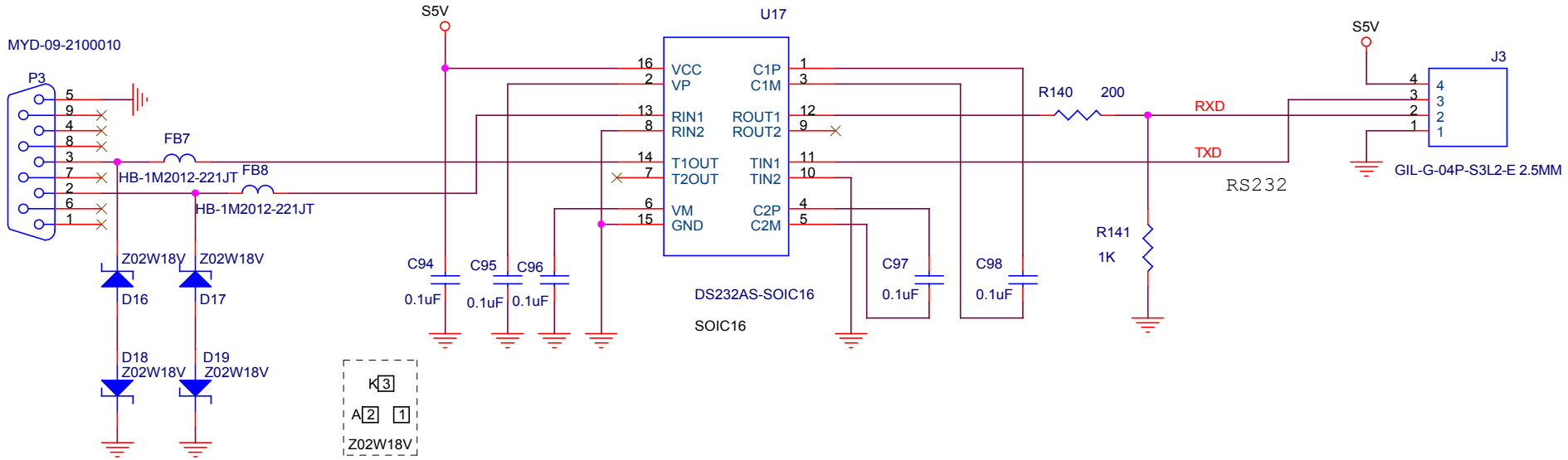

적용모델: EPT-4230AP,EPD-4231AP,EPD-42X1AK,EPT-42X0CK,EPT-4220AP

4	.	Revision	00	Item	PDP TV(42")		
3	.	Drawn	JH KIM	Title	RS-232		
2	.	Design	JS PARK	Dwg No.	.		
1	.	Check	..	Sheet No.	1 of 1	Date	2005.01.03
0	최초작성	Approve	HBKIM	E-RAE ELECTRONICS INDUSTRY CO.,LTD			