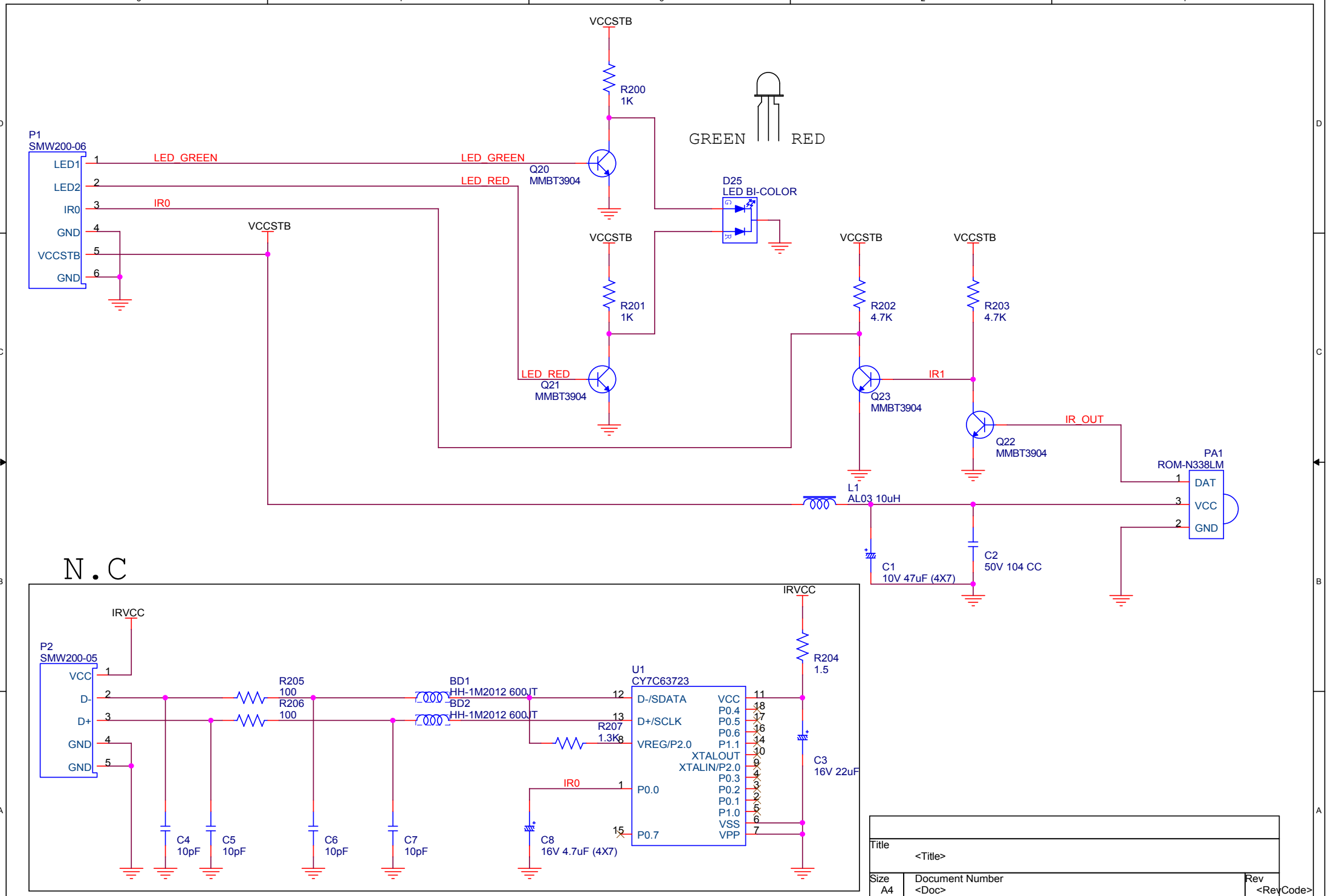

Title <Title>		
Size A4	Document Number <Doc>	Rev <RevCode>
Date: Thursday, August 25, 2005	Sheet 1 of 1	