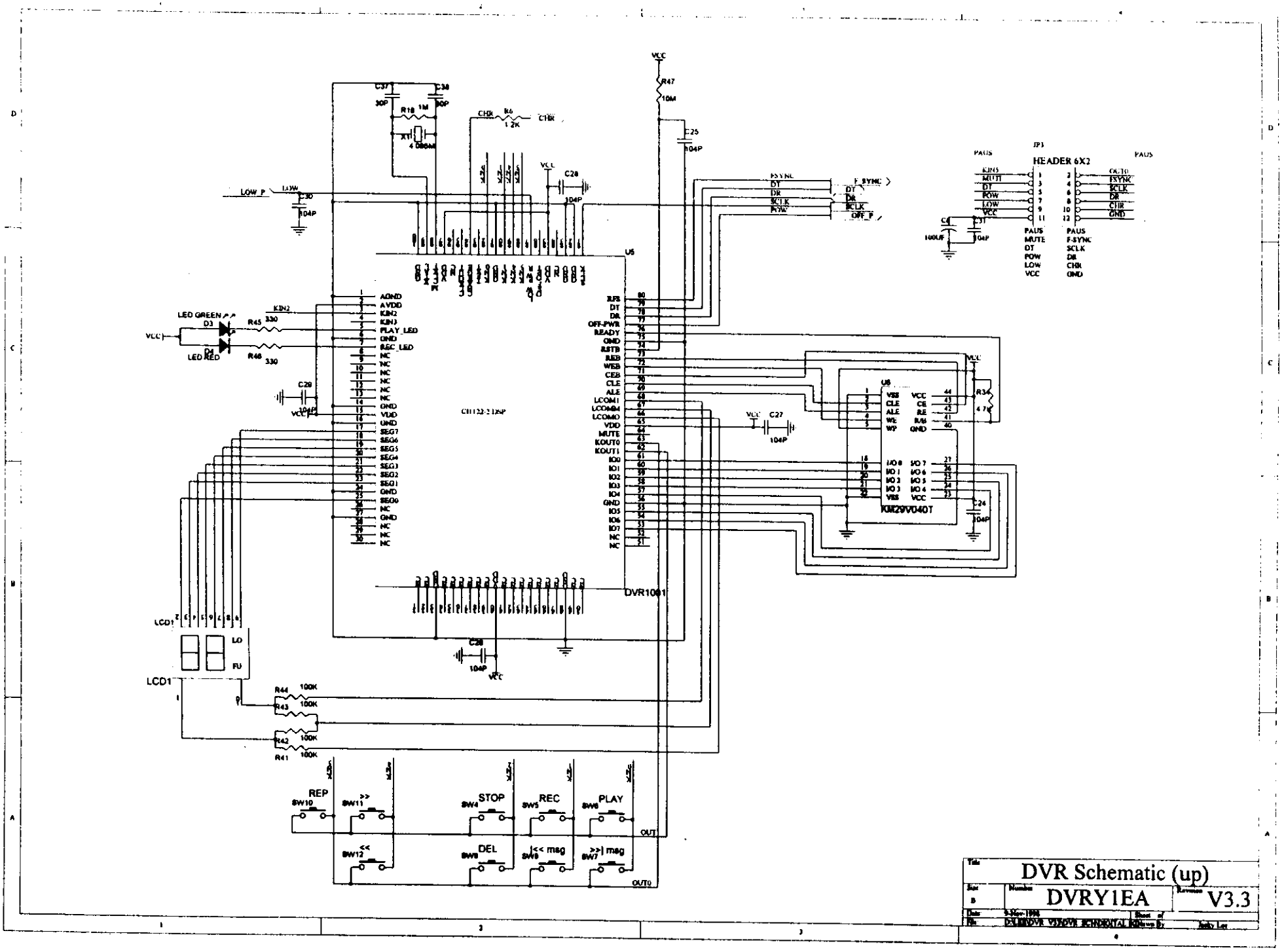
DVR Schematic (up)
DVRY1EA
V3.3
HEADER 6X2
JP3
U5
U6
DVR1001
KM29V040T
LCD1
LED GREEN
LED RED
REP
STOP
REC
PLAY
DEL
|<< msg
>>| msg
VCC
LOW_P
F_SYNC
OFF_P

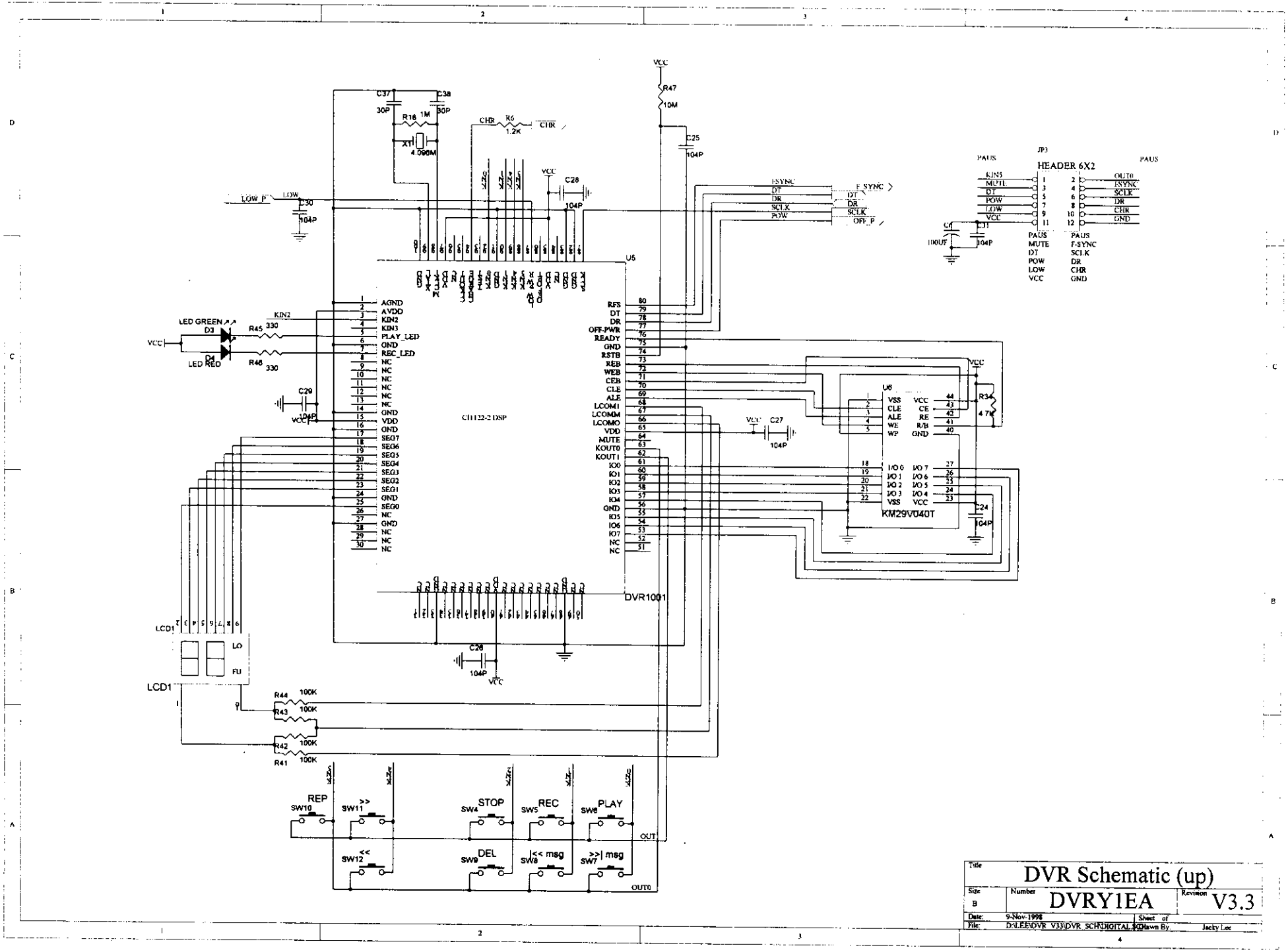
DVR Schematic (up)
DVRY1EA
V3.3
Size B
Number
Revision
Date: 9-Nov-1998
File: D:\LEE\DVR_V33\DVR_SCH\DIGITAL.SCH
Drawn By: Jacky Lee
Sheet of
CH122-2 DSP
DVR1001
KM29V040T
HEADER 6X2
JP3
LED GREEN
LED RED
LCD1
REP
STOP
REC
PLAY
DEL
|<< msg
>>| msg
VCC
GND
X1
4.096M
R47
10M
C25
104P
C28
C30
C37
C38
30P
R18
1M
R6
1.2K
CHR
LOW_P
LOW
R45
330
R46
330
C29
R34
4.7K
C27
C24
R44
100K
R43
R42
R41
SW10
SW11
SW12
SW4
SW5
SW6
SW9
SW8
SW7
OUT
OUT0
U5
U6
PAUS
MUTE
DT
POW
LOW
VCC
KIN5
KIN2
KIN3
PLAY_LED
REC_LED
SEG7
SEG6
SEG5
SEG4
SEG3
SEG2
SEG1
SEG0
RFS
OFF-PWR
READY
RSTB
REB
WEB
CEB
CLE
ALE
LCOM1
LCOM0
KOUT0
KOUT1
F-SYNC
SCLK
OUT0
CE
RE
R/B
WP
I/O 0
I/O 1
I/O 2
I/O 3
I/O 4
I/O 5
I/O 6
I/O 7

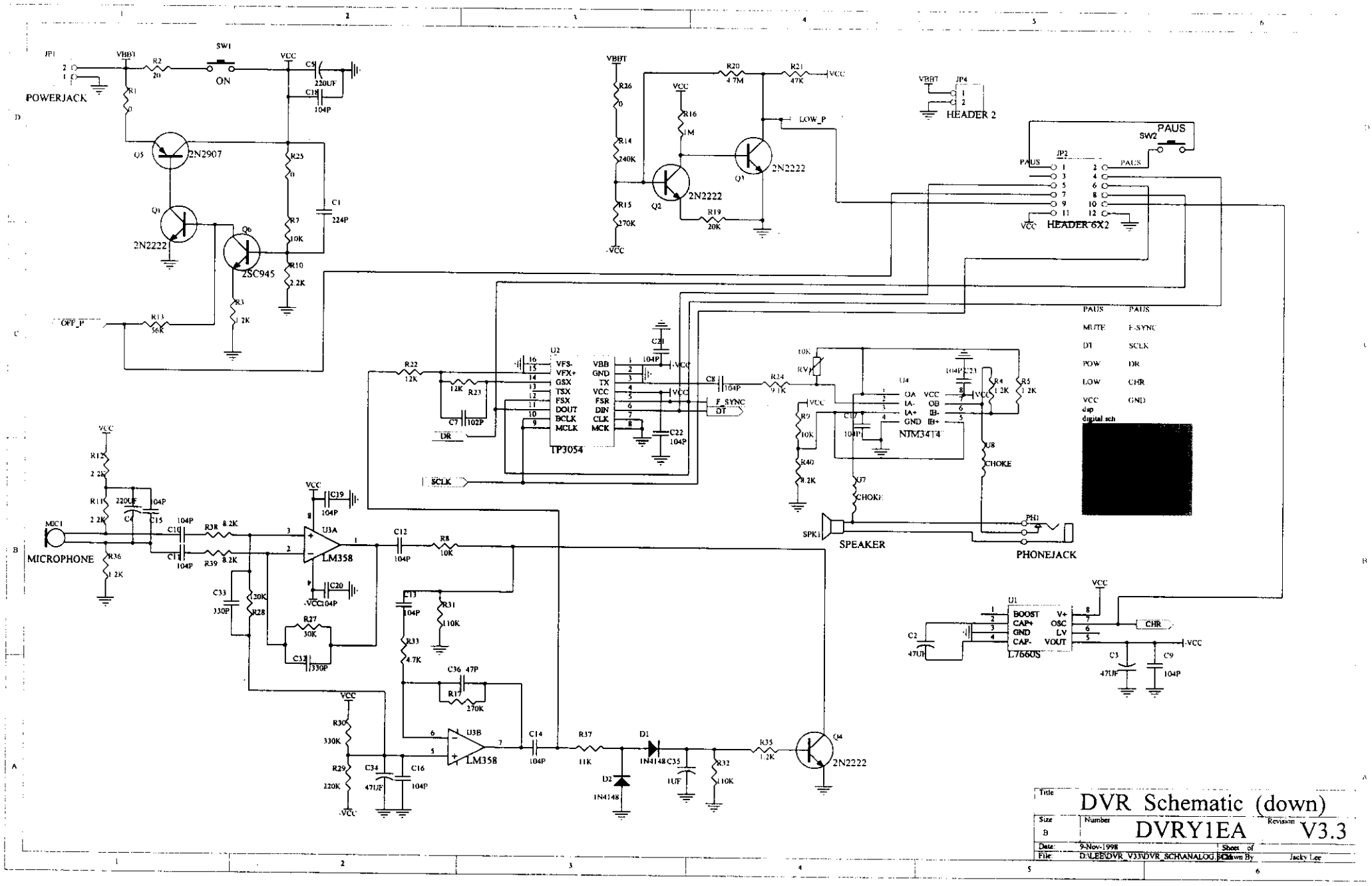
POWERJACK
JP1
VBBT
R2
20
SW1
ON
VCC
C5
220UF
C18
104P
R1
0
Q5
2N2907
Q1
2N2222
Q6
2SC945
R25
0
C1
224P
R7
10K
R10
2.2K
R3
1.2K
OFF_P
R13
56K
R26
0
R14
240K
R15
270K
-VCC
R20
4.7M
R21
47K
R16
1M
Q2
2N2222
Q3
2N2222
R19
20K
LOW_P
HEADER 2
JP4
SW2
PAUS
JP2
HEADER 6X2
PAUS
MUTE
DT
POW
LOW
VCC
dsp
digital.sch
F-SYNC
SCLK
DR
CHR
GND
U2
TP3054
VFS-
VFX+
GSX
TSX
FSX
DOUT
BCLK
MCLK
VBB
GND
TX
VCC
FSR
DIN
CLK
MCK
C21
104P
C22
104P
C8
104P
R24
9.1K
R22
12K
R23
12K
C7
102P
RV1
10K
R9
10K
R40
8.2K
U4
NJM3414
OA
IA-
IA+
GND
VCC
OB
IB-
IB+
C23
104P
C17
104P
R4
1.2K
R5
1.2K
U8
CHOKE
U7
CHOKE
SPK1
SPEAKER
PH1
PHONEJACK
U1
L7660S
BOOST
CAP+
GND
CAP-
V+
OSC
LV
VOUT
C2
47UF
C3
47UF
C9
104P
MIC1
MICROPHONE
R12
2.2K
R11
2.2K
C4
220UF
C15
104P
C10
104P
C11
104P
R38
8.2K
R39
8.2K
R36
1.2K
C19
104P
C20
104P
U3A
LM358
C12
104P
R8
10K
C33
330P
R28
20K
R27
30K
C32
330P
C13
104P
R31
110K
R33
4.7K
C36
47P
R17
270K
U3B
LM358
R30
330K
R29
220K
C34
47UF
C16
104P
C14
104P
R37
11K
D1
1N4148
D2
1N4148
C35
1UF
R32
110K
R35
1.2K
Q4
2N2222
Title
DVR Schematic (down)
Size
B
Number
DVRY1EA
Revision
V3.3
Date:
9-Nov-1998
Sheet of
File:
D:\LEE\DVR_V33\DVR_SCH\ANALOG.SCH
Drawn By:
Jacky Lee