FCC Test Report

Equipment	:	**Rugged Tablet Computer**
Brand Name	:	**AAEON**
Model No.	:	**xRTC-700Bx (x - Where x may be any combination of alphanumeric characters or "-"or blank.)**
FCC ID	:	**OHBRTC700BWBGH**
Standard	:	**47 CFR FCC Part 15.225**
Operating Band	:	**13.553 – 13.567 MHz**
Applicant / Manufacturer	:	**AAEON Technology Inc.** 5F, No. 135, Lane 235, Pao Chiao Rd.,Taipei, Taiwan

The product sample received on Jul. 29, 2016 and completely tested on Aug. 18, 2016. We, SPORTON, would like to declare that the tested sample has been evaluated in accordance with the procedures given in ANSI C63.10-2013 and shown compliance with the applicable technical standards.

The test results in this report apply exclusively to the tested model / sample. Without written approval of SPORTON INTERNATIONAL INC., the test report shall not be reproduced except in full.

Reviewed by:

Kevin Liang / Assistant Manager

Testing Laboratory
1190

Table of Contents

1 GENERAL DESCRIPTION 5

1.1 Information 5
1.2 Accessories and Support Equipment 8
1.3 Testing Applied Standards 8
1.4 Testing Location Information 8
1.5 Measurement Uncertainty 9

2 TEST CONFIGURATION OF EUT 10

2.1 The Worst Case Modulation Configuration 10
2.2 Test Channel Frequencies Configuration 10
2.3 The Worst Case Measurement Configuration 11
2.4 Test Setup Diagram 12

3 TRANSMITTER TEST RESULT 13

3.1 AC Power-line Conducted Emissions 13
3.2 Emission Bandwidth 17
3.3 Field Strength of Fundamental Emissions and Spectrum Mask 19
3.4 Transmitter Radiated Unwanted Emissions 21
3.5 Frequency Stability 28

4 TEST EQUIPMENT AND CALIBRATION DATA 30

APPENDIX A. TEST PHOTOS

APPENDIX B. PHOTOGRAPHS OF EUT

Summary of Test Result

Conformance Test Specifications					
Report Clause	**Ref. Std. Clause**	**Description**	**Measured**	**Limit**	**Result**
1.1.2	15.203	Antenna Requirement	Antenna connector mechanism complied	FCC 15.203	Complied
3.1	15.207	AC Power-line Conducted Emissions	[dBuV]: 13.56MHz 43.59(Margin 16.41dB) - QP 43.82(Margin 6.18dB) - AV	FCC 15.207	Complied
3.2	15.215(c)	Emission Bandwidth	20dB Bandwidth 2.76 [kHz] F_L: 13.55898 MHz F_H: 13.56174 MHz	Fall in band $F_L \geq$ 13.553 MHz $F_H \leq$ 13.567 MHz	Complied
3.3	15.225(a)~(d)	Field Strength of Fundamental Emissions and Spectrum Mask	Fundamental Emissions peak: 57.58 dBuV/m at 3m Device complies with spectrum mask – refer to test data	124 dBuV/m at 3m	Complied
3.4	15.225(d)	Transmitter Radiated Unwanted Emissions	[dBuV/m at 3m]: 39.700MHz 34.85 (Margin 5.15dB) - PK	FCC 15.209	Complied
3.5	15.225(e)	Frequency Stability	36.14 ppm	± 0.01% (100ppm)	Complied

Revision History

Report No.	Version	Description	Issued Date
FR671417AR	Rev. 01	Initial issue of report	Sep. 09, 2016

1 General Description

1.1 Information

1.1.1 RF General Information

RF General Information				
Frequency Range	**Modulation**	**Ch. Frequency (MHz)**	**Channel Number**	**Field Strength (dBuV/m)**
13.553 – 13.567 MHz	ISO 14443-3A (ASK)	13.56	1	57.58
Note 1: Field strength performed peak level at 3m.				

1.1.2 Antenna Information

Antenna Category	
☐	Equipment placed on the market without antennas
☒	Integral antenna (antenna permanently attached)
☐	External antenna (dedicated antennas)

Antenna General Information			
No.	**Ant. Cat.**	**Ant. Type**	**Brand Name**
1	Integral	Loop Antenna	-

1.1.3 Type of EUT

Identify EUT	
EUT Serial Number	N/A
Presentation of Equipment	☒ Production ; ☐ Pre-Production ; ☐ Prototype
Type of EUT	
☒	Stand-alone
☐	Combined (EUT where the radio part is fully integrated within another device) Combined Equipment - Brand Name / Model No.: …
☐	Plug-in radio (EUT intended for a variety of host systems) Host System - Brand Name / Model No.: …
☐	Other:

1.1.4 Test Signal Duty Cycle

Duty Cycle Operation Restriction			
The transmitter is used for		The transmitter is operated	
☒	Inductive applications	☒	Automatically triggered
☐	Duty cycle fixed mode	☒	Duty cycle random mode
Duty cycle mode - NFC-A (ISO 14443-3A)			
Declare transmitter duty cycle / 1 hour =		100%	
Duty cycle Limit			
☐	Class 1 - < 0.1 %	☐	Class 2 - < 1.0 %
☐	Class 3 - < 10 %	☒	Class 4 - Up to 100 %
Duty cycle mode - NFC-B (ISO 14443-3B)			
Declare transmitter duty cycle / 1 hour =		100%	
Duty cycle Limit			
☐	Class 1 - < 0.1 %	☐	Class 2 - < 1.0 %
☐	Class 3 - < 10 %	☒	Class 4 - Up to 100 %
Duty cycle mode - NFC-F (ISO 18092)			
Declare transmitter duty cycle / 1 hour =		100%	
Duty cycle Limit			
☐	Class 1 - < 0.1 %	☐	Class 2 - < 1.0 %
☐	Class 3 - < 10 %	☐	Class 4 - Up to 100 %
Duty cycle mode - NFC-V (ISO 15693)			
Declare transmitter duty cycle / 1 hour =		100%	
Duty cycle Limit			
☐	Class 1 - < 0.1 %	☐	Class 2 - < 1.0 %
☐	Class 3 - < 10 %	☒	Class 4 - Up to 100 %

1.1.5 Test Signal Duty Cycle

Operated Mode for Worst Duty Cycle	
☒ Operated normally mode for worst duty cycle	
☐ Operated test mode for worst duty cycle	
Test Signal Duty Cycle (x)	**Voltage Duty Factor [dB] – (20 log 1/x)**
☒ 100%	0.00

1.1.6 EUT Operational Condition

Supply Voltage	☒ AC mains	☒ DC	
Type of DC Source	☐ Internal DC supply	☒ External AC adapter	☒ Battery
Test Voltage	☒ Vnom (7.4 V)	☒ Vmax (8.4 V)	☒ Vmin (6.0 V)
Test Climatic	☒ Tnom (20°C)	☒ Tmax (50°C)	☒ Tmin (-20°C)

1.2 Accessories and Support Equipment

Accessories Information				
AC Adapter	Brand Name	FSP	Model Name	FSP036-RBBN2
	Power Rating	I/P: 100 - 240 Vac, 1.2 A, O/P: 12 Vdc, 3 A		
	Power Cord	1.2 meter, non-shielded cable, with one ferrite core		
Battery 1	Brand Name	Getac	Model Name	RTC600S
	Power Rating	7.4 Vdc, 1530 mAh	Type	Li-ion, 2S1P
Battery 2	Brand Name	Getac	Model Name	RTC600H
	Power Rating	7.4Vdc, 1530 mAh	Type	Li-ion, 2S1P

Reminder: Regarding to more detail and other information, please refer to user manual.

Support Equipment - AC Conduction			
No.	**Equipment**	**Brand Name**	**Model Name**
1	RFID Card	-	-

Support Equipment - Radiated			
No.	**Equipment**	**Brand Name**	**Model Name**
1	RFID Card	-	-

Support Equipment- RF Conducted			
No.	**Equipment**	**Brand Name**	**Model Name**
1	RFID Card	-	-

1.3 Testing Applied Standards

According to the specifications of the manufacturer, the EUT must comply with the requirements of the following standards:

- 47 CFR FCC Part 15
- ANSI C63.10-2013
- FCC KDB 174176 D01

1.4 Testing Location Information

Testing Location					
☒	HWA YA	ADD : No. 52, Hwa Ya 1st Rd., Hwa Ya Technology Park, Kwei-Shan District, Tao Yuan City, Taiwan, R.O.C. TEL : 886-3-327-3456 FAX : 886-3-327-0973			
Test Condition		**Test Site No.**	**Test Engineer**	**Test Environment**	**Test Date**
AC Conduction		CO04-HY	Ryan	25°C / 52%	16/08/2016
RF Conducted		TH01-HY	Howard	25°C / 65%	12/08/2016
Radiated		03CH03-HY	Jeff	21.5°C / 58%	18/08/2016

1.5 Measurement Uncertainty

ISO/IEC 17025 requires that an estimate of the measurement uncertainties associated with the emissions test results be included in the report. The measurement uncertainties given below are based on a 95% confidence level (based on a coverage factor (k=2)

Measurement Uncertainty		
Test Item		**Uncertainty**
AC power-line conducted emissions		±2.2 dB
Emission bandwidth		±1.4 %
Unwanted emissions, conducted	9 – 150 kHz	±0.38 dB
	0.15 – 30 MHz	±0.42 dB
	30 – 1000 MHz	±0.51 dB
All emissions, radiated	9 – 150 kHz	±2.49 dB
	0.15 – 30 MHz	±2.28 dB
	30 – 1000 MHz	±2.56 dB
Temperature		±0.8 ℃
Humidity		±3 %
DC and low frequency voltages		±3 %
Time		±1.4 %
Duty Cycle		±1.4 %

2 Test Configuration of EUT

2.1 The Worst Case Modulation Configuration

Modulation Used for Conformance Testing	
Modulation Mode	**Field Strength (dBuV/m at 3 m)**
NFC-Read/Write	57.58

2.2 Test Channel Frequencies Configuration

Modulation Mode	Test Channel Frequencies (MHz)
NFC-Read/Write	13.56-(F1)

2.3 The Worst Case Measurement Configuration

The Worst Case Mode for Following Conformance Tests	
Tests Item	AC power-line conducted emissions
Condition	AC power-line conducted measurement for line and neutral Test Voltage: 120Vac / 60Hz
Operating Mode	Adapter Mode

The Worst Case Mode for Following Conformance Tests	
Tests Item	Emission Bandwidth, Frequency Stability
Test Condition	Conducted measurement

The Worst Case Mode for Following Conformance Tests			
Tests Item	Field Strength of Fundamental Emissions Spectrum Mask, Transmitter Radiated Unwanted Emissions		
Test Condition	Radiated measurement		
User Position	☐ EUT will be placed in fixed position.		
	☐ EUT will be placed in mobile position and operating multiple positions. EUT shall be performed three orthogonal planes.		
	☒ EUT will be a hand-held or body-worn battery-powered devices and operating multiple positions. EUT shall be performed three orthogonal planes.		
Pretest Mode	☒ 1. EUT Built in NFC A type		
	☒ 2. EUT Built in NFC B type		
	☐ 3. EUT Built in NFC F type		
	☒ 4. EUT Built in NFC V type		
Mode 1 configuration was pretested and found to be the worst case and measured during the test.			
Operating Mode < 1GHz	☒ 1. Adapter Mode		
Modulation Mode	NFC-Read/Write		
Orthogonal Planes of EUT	**X Plane**	**Y Plane**	**Z Plane**
Worst Planes of EUT			V

2.4 Test Setup Diagram

Test Setup Diagram – AC Line Conducted Emission Test

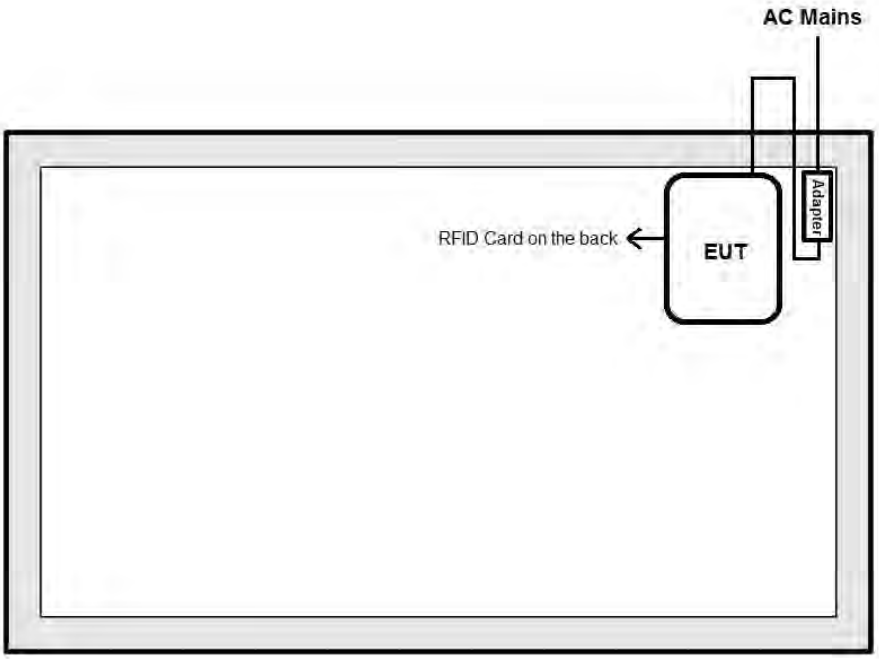

Test Setup Diagram - Radiated Test

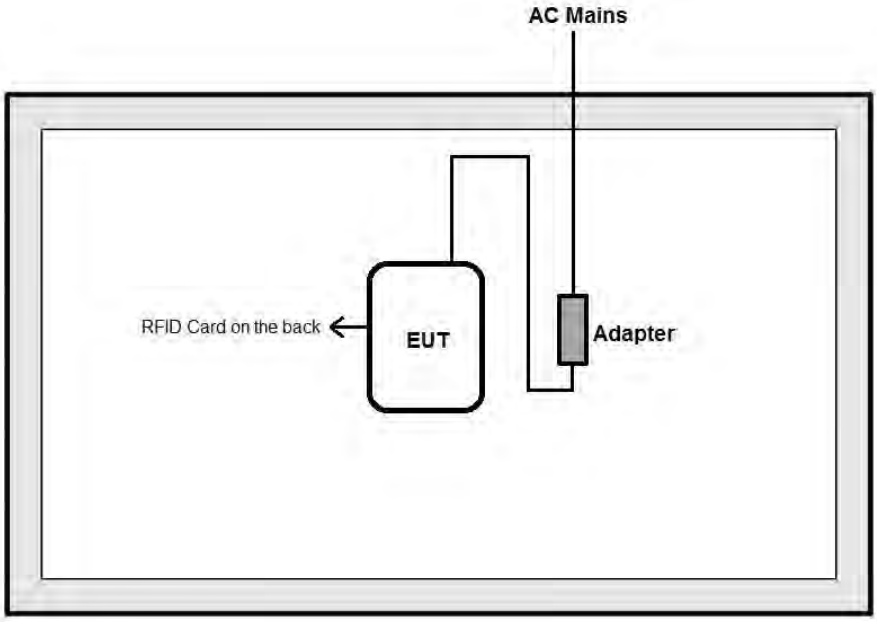

3 Transmitter Test Result

3.1 AC Power-line Conducted Emissions

3.1.1 AC Power-line Conducted Emissions Limit

AC Power-line Conducted Emissions Limit		
Frequency Emission (MHz)	**Quasi-Peak**	**Average**
0.15-0.5	66 - 56 *	56 - 46 *
0.5-5	56	46
5-30	60	50
Note 1: * Decreases with the logarithm of the frequency.		

3.1.2 Measuring Instruments

Refer a test equipment and calibration data table in this test report.

3.1.3 Test Procedures

Test Method		
☒	Refer as ANSI C63.10-2013, clause 6.2 for AC power-line conducted emissions.	
☒	If AC conducted emissions fall in operating band, then following below test method confirm final result.	
	☐	Accept measurements done with a suitable dummy load replacing the antenna under the following conditions: (1) Perform the AC line conducted tests with the antenna connected to determine compliance with FCC 15.207 limits outside the transmitter's fundamental emission band; (2) Retest with a dummy load to determine compliance with FCC 15.207 limits within the transmitter's fundamental emission band.
	☒	For a device with a permanent antenna operating at or below 30 MHz, accept measurements done with a suitable dummy load, in lieu of the permanent antenna under the following conditions: (1) Perform the AC line conducted tests with the permanent antenna to determine compliance with the FCC 15.207 limits outside the transmitter's fundamental emission band; (2) Retest with a dummy load in lieu of the permanent antenna to determine compliance with the FCC 15.207 limits within the transmitter's fundamental emission band.

3.1.4 Test Setup

AC Power-line Conducted Emissions

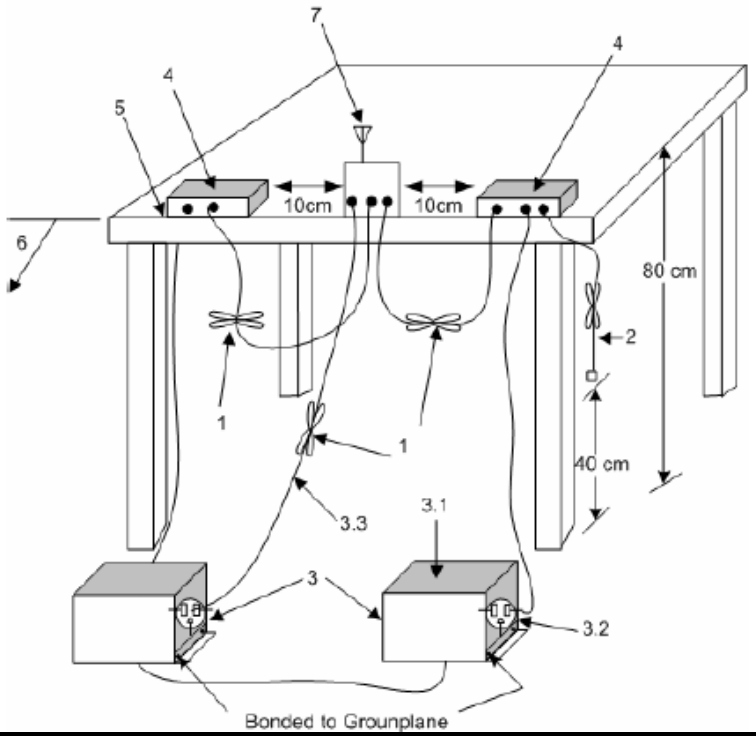

3.1.5 Test Result of AC Power-line Conducted Emissions

AC Power-line Conducted Emissions Result			
Operating Mode	1	**Power Phase**	Neutral
Operating Function	Adapter Mode		

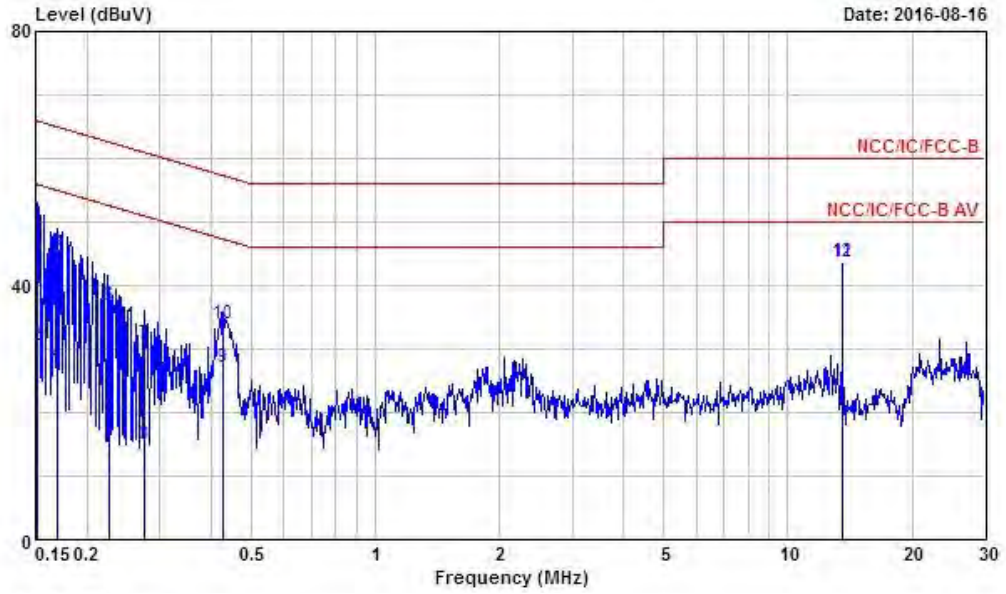

	Freq	Level	Over Limit	Limit Line	Read Level	LISN Factor	Cable Loss	Remark
	MHz	dBuV	dB	dBuV	dBuV	dB	dB	
1	@0.1515980	48.97	-16.94	65.91	48.65	0.10	0.22	QP
2	0.1515980	30.54	-25.37	55.91	30.22	0.10	0.22	Average
3	0.1694400	45.26	-19.73	64.99	44.91	0.10	0.25	QP
4	0.1694400	27.61	-27.38	54.99	27.26	0.10	0.25	Average
5	0.2267630	19.50	-33.07	52.57	19.13	0.11	0.26	Average
6	0.2267630	36.73	-25.84	62.57	36.36	0.11	0.26	QP
7	0.2758730	30.82	-30.12	60.94	30.50	0.11	0.21	QP
8	0.2758730	15.02	-35.92	50.94	14.70	0.11	0.21	Average
9	0.4264950	27.02	-20.30	47.32	26.80	0.12	0.10	Average
10	0.4264950	33.86	-23.46	57.32	33.64	0.12	0.10	QP
11	@ 13.560	43.59	-16.41	60.00	43.07	0.32	0.20	QP
12	@ 13.560	43.82	-6.18	50.00	43.30	0.32	0.20	Average

Note 1: “>20dB” means emission levels that exceed the level of 20 dB below the applicable limit.
Note 2: “N/F” means Nothing Found emissions (No emissions were detected.)
Note 3: When emissions are in operating band over limits, retest with a dummy load for final in-band results.

AC Power-line Conducted Emissions Result			
Operating Mode	1	**Power Phase**	Line
Operating Function	Adapter Mode		

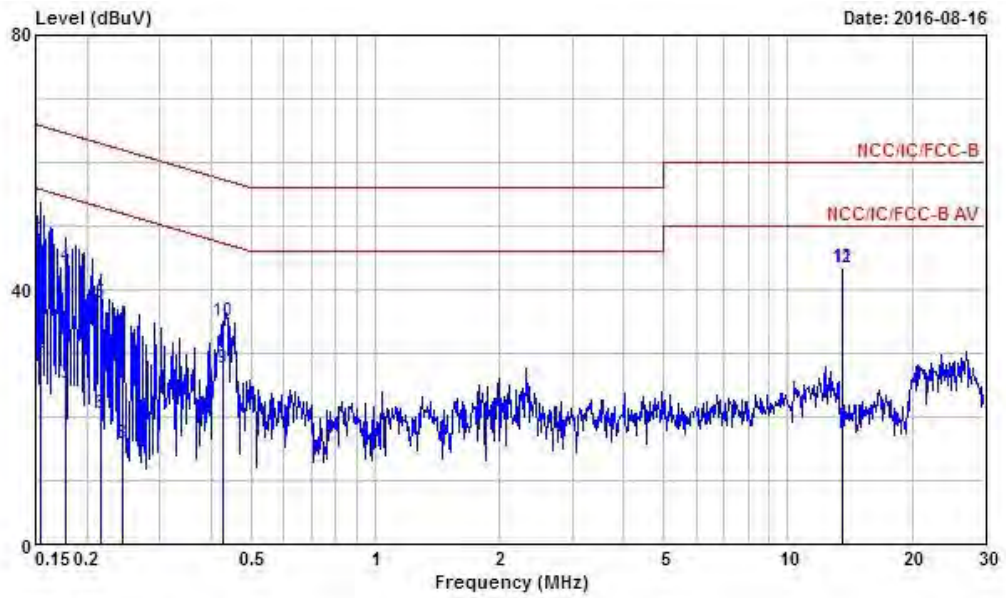

	Freq	Level	Over Limit	Limit Line	Read Level	LISN Factor	Cable Loss	Remark
	MHz	dBuV	dB	dBuV	dBuV	dB	dB	
1	@0.1540270	47.77	-18.01	65.78	47.44	0.11	0.22	QP
2	0.1540270	29.92	-25.86	55.78	29.59	0.11	0.22	Average
3	0.1777150	25.19	-29.40	54.59	24.81	0.11	0.27	Average
4	0.1777150	43.74	-20.85	64.59	43.36	0.11	0.27	QP
5	0.2150610	37.93	-25.08	63.01	37.54	0.11	0.28	QP
6	0.2150610	20.62	-32.39	53.01	20.23	0.11	0.28	Average
7	0.2429320	33.14	-28.86	62.00	32.79	0.11	0.24	QP
8	0.2429320	15.79	-36.21	52.00	15.44	0.11	0.24	Average
9	0.4258100	27.75	-19.58	47.33	27.53	0.12	0.10	Average
10	0.4258100	34.88	-22.45	57.33	34.66	0.12	0.10	QP
11	@ 13.560	43.30	-16.70	60.00	42.80	0.30	0.20	QP
12	@ 13.560	43.46	-6.54	50.00	42.96	0.30	0.20	Average

Note 1: “>20dB” means emission levels that exceed the level of 20 dB below the applicable limit.
Note 2: “N/F” means Nothing Found emissions (No emissions were detected.)
Note 3: When emissions are in operating band over limits, retest with a dummy load for final in-band results.

3.2 Emission Bandwidth

3.2.1 Emission Bandwidth Limit

20dB Bandwidth Limit
☒ Intentional radiators must be designed to ensure that the 20 dB bandwidth of the emissions in the specific band (13.553 – 13.567 MHz).

3.2.2 Measuring Instruments

Refer a test equipment and calibration data table in this test report.

3.2.3 Test Procedures

Test Method
☒ For the emission bandwidth refer ANSI C63.10, clause 6.9.1 for occupied bandwidth testing.
☒ For radiated measurement. Loop antenna was rotated about the horizontal and vertical axis and the equipment to be measured and the test antenna shall be oriented to obtain the maximum emitted field strength level.

3.2.4 Test Setup

Emission Bandwidth

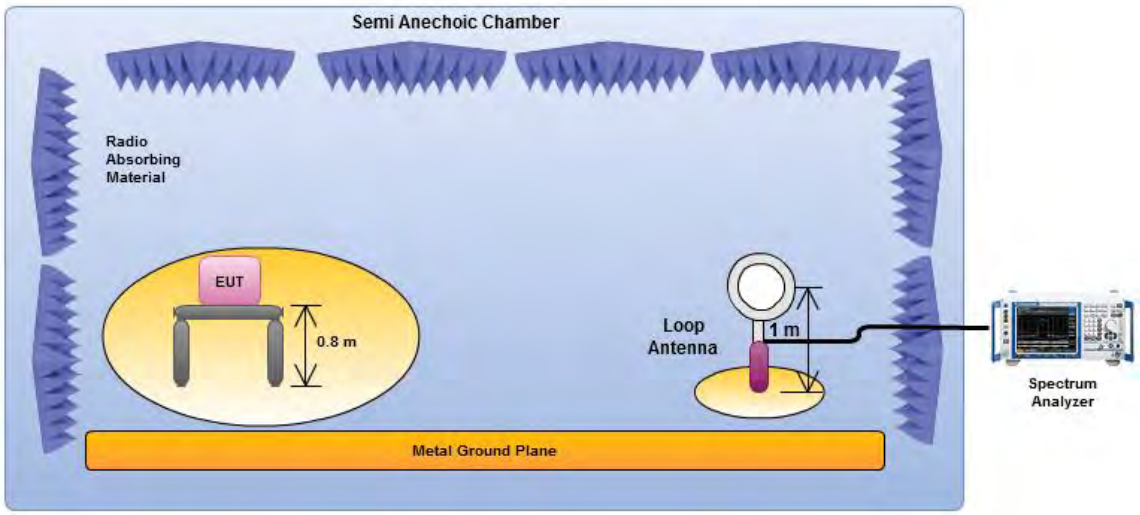

3.2.5 Test Result of Emission Bandwidth

Occupied Channel Bandwidth Result					
Modulation Mode	Frequency (MHz)	20dB Bandwidth (kHz)	F_L at 20dB BW (MHz)	F_H at 20dB BW (MHz)	99% Bandwidth (kHz)
NFC-Read/Write	13.56	2.76000	13.55898	13.56174	2.38000
Limit		**N/A**	**13.553**	**13.567**	**N/A**
Result		**Complied**			

Emission Bandwidth Plot

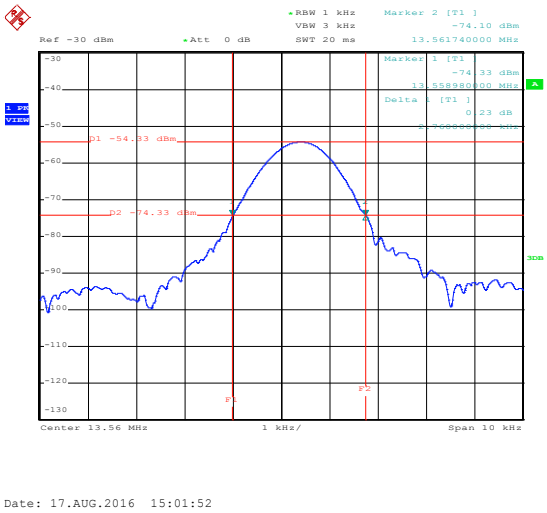

3.3 Field Strength of Fundamental Emissions and Spectrum Mask

3.3.1 Field Strength of Fundamental Emissions and Spectrum Mask Limit

Field Strength of Fundamental Emissions For FCC					
Emissions	**(uV/m)@30m**	**(dBuV/m)@30m**	**(dBuV/m)@10m**	**(dBuV/m)@3m**	**(dBuV/m)@1m**
fundamental	15848	84.0	103.1	124.0	143.1
Quasi peak measurement of the fundamental.					

Spectrum Mask For FCC					
Freq. of Emission (MHz)	**(uV/m)@30m**	**(dBuV/m)@30m**	**(dBuV/m)@10m**	**(dBuV/m)@3m**	**(dBuV/m)@1m**
1.705~13.110	30	29.5	48.6	69.5	88.6
13.110~13.410	106	40.5	59.6	80.5	99.6
13.410~13.553	334	50.5	69.6	90.5	109.6
13.553~13.567	15848	84.0	103.1	124.0	143.1
13.567~13.710	334	50.5	69.6	90.5	109.6
13.710~14.010	106	40.5	59.6	80.5	99.6
14.010~30.000	30	29.5	48.6	69.5	88.6

3.3.2 Measuring Instruments

Refer a test equipment and calibration data table in this test report.

3.3.3 Test Procedures

Test Method		
☒	Refer as ANSI C63.10, clause 6.4 for radiated emissions from below 30 MHz and test distance is 3m.	
☒	At frequencies below 30 MHz, measurements may be performed at a distance closer than that specified in the requirements; however, an attempt should be made to avoid making measurements in the near field. Pending the development of an appropriate measurement procedure for measurements performed below 30 MHz, when performing measurements at a closer distance than specified, the results shall be following below methods.	
	☐	The results shall be extrapolated to the specified distance by making measurements at a minimum of two distances on at least one radial to determine the proper extrapolation factor.
	☒	The results shall be by using the square of an inverse linear distance extrapolation factor (40 dB/decade).
☒	For radiated measurement. Loop antenna was rotated about the horizontal and vertical axis and the equipment to be measured and the test antenna shall be oriented to obtain the maximum emitted field strength level.	

3.3.4 Test Setup

Field Strength of Fundamental Emissions and Spectrum Mask

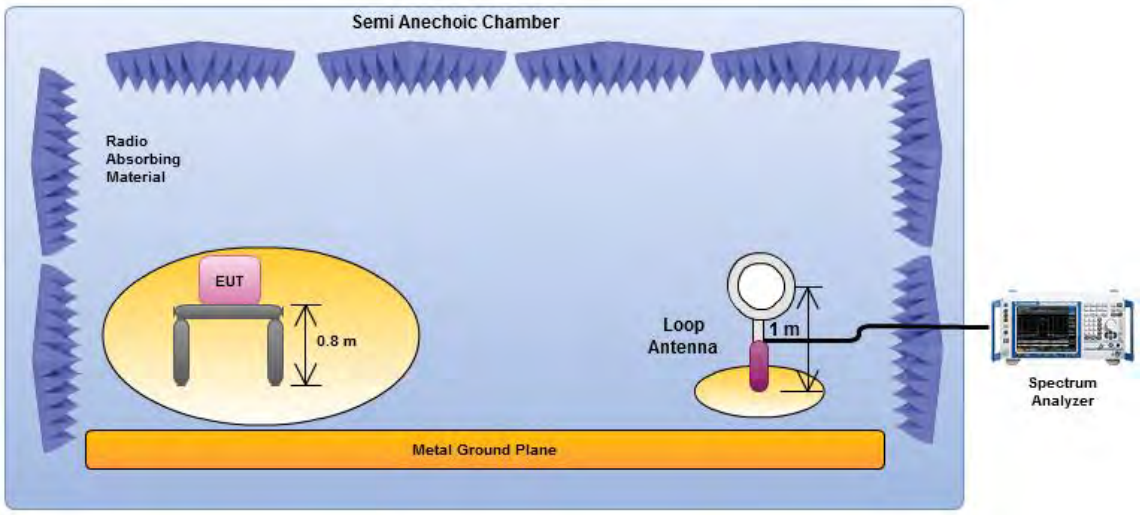

3.3.5 Test Result of Field Strength of Fundamental Emissions and Spectrum Mask

Field Strength of Fundamental Emissions Result					
Modulation Mode	**Frequency (MHz)**	**Fundamental (dBuV/m)@3m**	**Polarization**	**Margin (dB)**	**Limit (dBuV/m)@3m**
NFC-Read/Write	F1	57.58	H	66.42	124.00
Result		**Complied**			
Note 1: Measurement worst emissions of receive antenna polarization: H(Horizontal).					

Spectrum Mask Plot

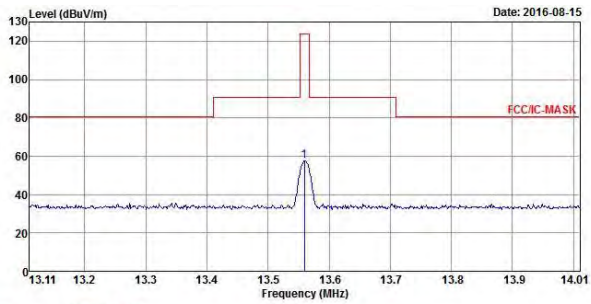

	Freq	Level	Over Limit	Limit Line	ReadAntenna Level	Antenna Factor	Cable Loss	Preamp Factor	Remark
	MHz	dBuV/m	dB	dBuV/m	dBuV	dB/m	dB	dB	
1	13.560	57.58	-66.42	124.00	35.72	21.37	0.49	0.00	Peak

3.4 Transmitter Radiated Unwanted Emissions

3.4.1 Transmitter Radiated Unwanted Emissions Limit

Transmitter Radiated Unwanted Emissions Limit			
Frequency Range (MHz)	**Field Strength (uV/m)**	**Field Strength (dBuV/m)**	**Measure Distance (m)**
0.009~0.490	2400/F(kHz)	48.5 - 13.8	300
0.490~1.705	24000/F(kHz)	33.8 - 23	30
1.705~30.0	30	29	30
30~88	100	40	3
88~216	150	43.5	3
216~960	200	46	3
Above 960	500	54	3

Note 1: Test distance for frequencies at or above 30 MHz, measurements may be performed at a distance other than the limit distance provided they are not performed in the near field and the emissions to be measured can be detected by the measurement equipment. When performing measurements at a distance other than that specified, the results shall be extrapolated to the specified distance using an extrapolation factor of 20 dB/decade (inverse of linear distance for field-strength measurements, inverse of linear distance-squared for power-density measurements).

Note 2: Test distance for frequencies at below 30 MHz, measurements may be performed at a distance closer than the EUT limit distance; however, an attempt should be made to avoid making measurements in the near field. When performing measurements below 30 MHz at a closer distance than the limit distance, the results shall be extrapolated to the specified distance by either making measurements at a minimum of two or more distances on at least one radial to determine the proper extrapolation factor or by using the square of an inverse linear distance extrapolation factor (40 dB/decade). The test report shall specify the extrapolation method used to determine compliance of the EUT.

3.4.2 Measuring Instruments

Refer a test equipment and calibration data table in this test report.

3.4.3 Test Procedures

Test Method	
☒	Refer as ANSI C63.10, clause 6.5 for radiated emissions from 30 MHz to 1 GHz and test distance is 3m.
☒	Refer as ANSI C63.10, clause 6.4 for radiated emissions from below 30 MHz and test distance is 3m.
☒	At frequencies below 30 MHz, measurements may be performed at a distance closer than that specified in the requirements; however, an attempt should be made to avoid making measurements in the near field. Pending the development of an appropriate measurement procedure for measurements performed below 30 MHz, when performing measurements at a closer distance than specified, the results shall be following below methods.
	☐ The results shall be extrapolated to the specified distance by making measurements at a minimum of two distances on at least one radial to determine the proper extrapolation factor.
	☒ The results shall be by using the square of an inverse linear distance extrapolation factor (40 dB/decade).
☒	For radiated measurement. Loop antenna was rotated about the horizontal and vertical axis and the equipment to be measured and the test antenna shall be oriented to obtain the maximum emitted field strength level.
☒	The any unwanted emissions level shall not exceed the fundamental emission level.
☒	All amplitude of spurious emissions that are attenuated by more than 20 dB below the permissible value has no need to be reported.

3.4.4 Test Setup

Transmitter Radiated Unwanted Emissions

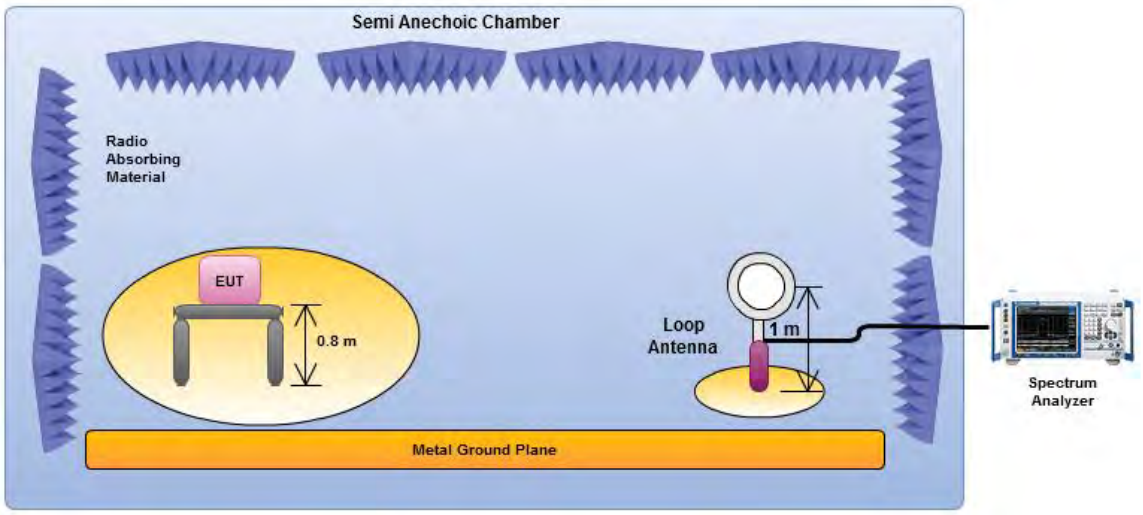

Magnetic field tests shall be performed in the frequency range of 9 kHz to 30 MHz using a calibrated loop antenna. The center of the loop shall be 1 m above the ground.

Transmitter Radiated Bandedge Emissions

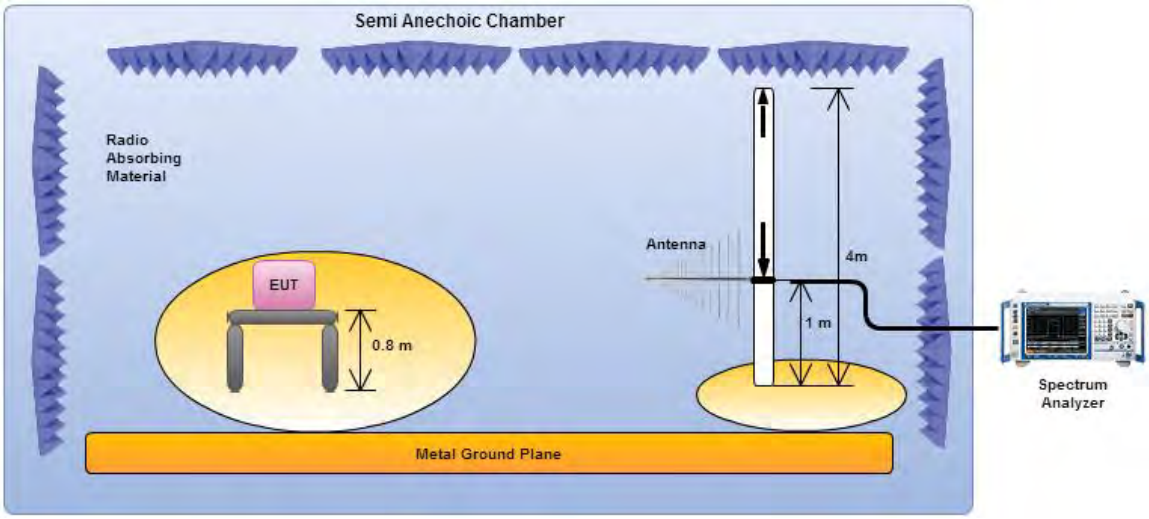

Electric field tests shall be performed in the frequency range of 30 MHz to 1000 MHz using a calibrated bi-log antenna. the antenna height shall be varied from 1 m to 4 m.

3.4.5 Transmitter Radiated Unwanted Emissions (Below 30MHz)

Transmitter Radiated Unwanted Emissions (9 kHz – 150 kHz)			
Modulation Mode	NFC-Read/Write	**Polarization**	H
Operating Mode	1		
Operating Function	Adapter Mode		

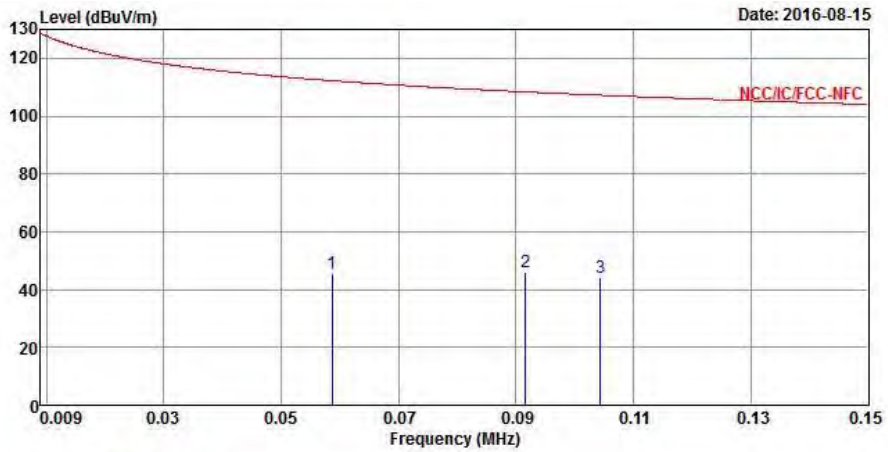

	Freq	Level	Over Limit	Limit Line	ReadAntenna Level	Antenna Factor	Cable Loss	Preamp Factor	Remark
	MHz	dBuV/m	dB	dBuV/m	dBuV	dB/m	dB	dB	
1	0.059	45.80	-66.44	112.24	24.65	21.00	0.15	0.00	Peak
2	0.092	46.02	-62.35	108.37	24.76	21.10	0.16	0.00	Peak
3	0.104	44.26	-62.98	107.24	23.00	21.10	0.16	0.00	Peak

Note 1: “>20dB” means spurious emission levels that exceed the level of 6 dB below the applicable limit.
Note 2: “N/F” means Nothing Found spurious emissions (No spurious emissions were detected.)
Note 3: Measurement worst emissions of receive antenna polarization: H (Horizontal).
Note 4: No level of unwanted emissions exceeds the level of the fundamental emission.

Transmitter Radiated Unwanted Emissions (150 kHz – 30 MHz)			
Modulation Mode	NFC-Read/Write	**Polarization**	H
Operating Mode	1		
Operating Function	Adapter Mode		

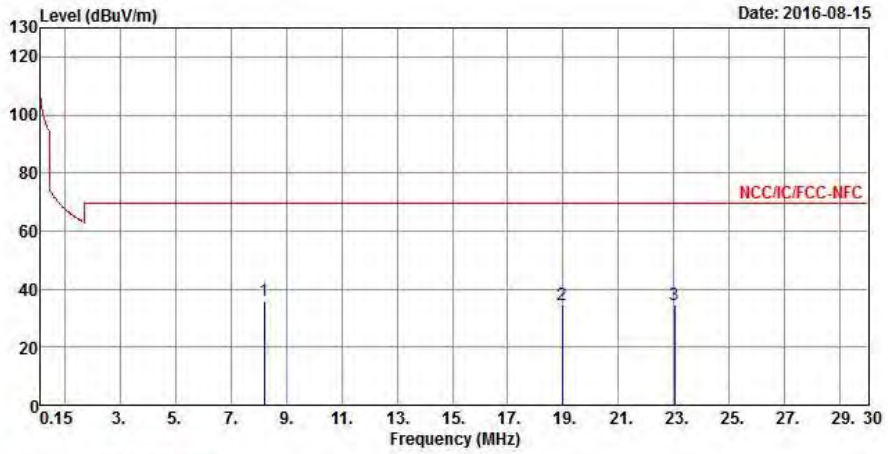

	Freq	Level	Over Limit	Limit Line	ReadAntenna Level	Factor	Cable Loss	Preamp Factor	Remark
	MHz	dBuV/m	dB	dBuV/m	dBuV	dB/m	dB	dB	
1	8.209	35.81	-33.73	69.54	14.24	21.16	0.41	0.00	Peak
2	18.956	34.68	-34.86	69.54	12.57	21.48	0.63	0.00	Peak
3	23.015	34.32	-35.22	69.54	12.05	21.56	0.71	0.00	Peak

Note 1: “>20dB” means spurious emission levels that exceed the level of 6 dB below the applicable limit.
Note 2: “N/F” means Nothing Found spurious emissions (No spurious emissions were detected.)
Note 3: Measurement worst emissions of receive antenna polarization: H (Horizontal).
Note 4: No level of unwanted emissions exceeds the level of the fundamental emission.

3.4.6 Transmitter Radiated Unwanted Emissions (Above 30MHz)

Transmitter Radiated Spurious Emissions (Above 30MHz)			
Modulation Mode	NFC-Read/Write	**Test Freq. (FX)**	F1
Operating Function	Transmit	**Polarization**	V

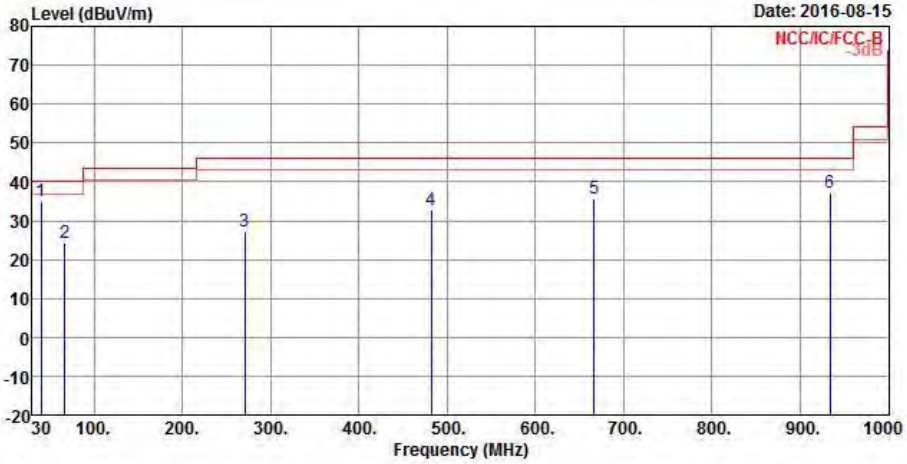

	Freq	Level	Over Limit	Limit Line	Read Level	Antenna Factor	Cable Loss	Preamp Factor	Remark
	MHz	dBuV/m	dB	dBuV/m	dBuV	dB/m	dB	dB	
1	39.700	34.85	-5.15	40.00	41.79	19.69	0.90	27.53	Peak
2	66.860	24.19	-15.81	40.00	37.88	12.56	1.21	27.46	Peak
3	270.560	27.27	-18.73	46.00	32.16	19.35	2.52	26.76	Peak
4	482.020	32.86	-13.14	46.00	33.47	23.49	3.50	27.60	Peak
5	666.320	35.64	-10.36	46.00	33.91	25.39	4.30	27.96	Peak
6	934.040	37.38	-8.62	46.00	31.89	27.82	5.10	27.43	Peak

Note 1: “>20dB” means spurious emission levels that exceed the level of 6 dB below the applicable limit.
Note 2: “N/F” means Nothing Found spurious emissions (No spurious emissions were detected.)
Note 3: Measurement receive antenna polarization: H (Horizontal), V (Vertical).
Note 4: No level of unwanted emissions exceeds the level of the fundamental emission.

Transmitter Radiated Spurious Emissions (Above 30MHz)			
Modulation Mode	NFC-Read/Write	**Test Freq. (FX)**	F1
Operating Function	Transmit	**Polarization**	H

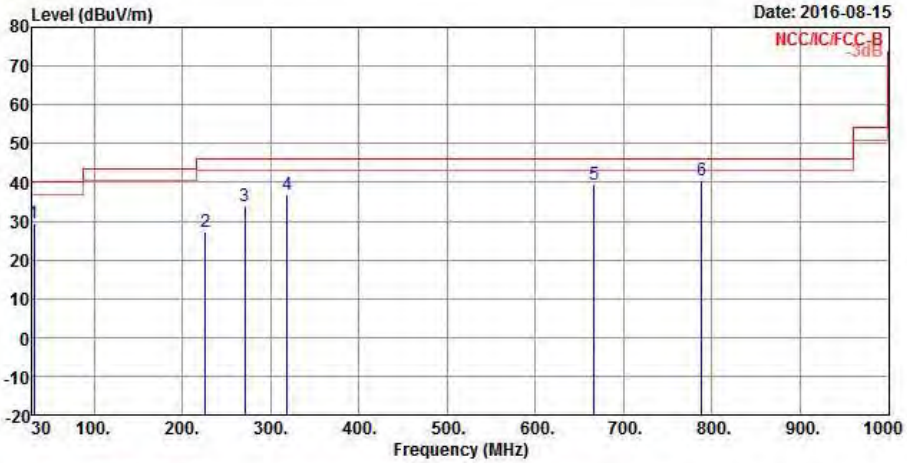

	Freq	Level	Over Limit	Limit Line	Read Level	Antenna Factor	Cable Loss	Preamp Factor	Remark
	MHz	dBuV/m	dB	dBuV/m	dBuV	dB/m	dB	dB	
1	31.940	29.61	-10.39	40.00	31.95	24.41	0.80	27.55	Peak
2	225.940	27.27	-18.73	46.00	35.01	16.75	2.37	26.86	Peak
3	270.560	33.78	-12.22	46.00	38.67	19.35	2.52	26.76	Peak
4	319.060	37.01	-8.99	46.00	40.57	20.35	2.79	26.70	Peak
5	666.320	39.59	-6.41	46.00	37.86	25.39	4.30	27.96	Peak
6	788.540	40.69	-5.31	46.00	37.42	26.52	4.55	27.80	Peak

Note 1: “>20dB” means spurious emission levels that exceed the level of 6 dB below the applicable limit.
Note 2: “N/F” means Nothing Found spurious emissions (No spurious emissions were detected.)
Note 3: Measurement receive antenna polarization: H (Horizontal), V (Vertical).
Note 4: No level of unwanted emissions exceeds the level of the fundamental emission.

3.5 Frequency Stability

3.5.1 Frequency Stability Limit

Frequency Stability Limit
☒ Carrier frequency stability shall be maintained to ±0.01% (±100 ppm).

3.5.2 Measuring Instruments

Refer a test equipment and calibration data table in this test report.

3.5.3 Test Procedures

Test Method	
☒	Refer as ANSI C63.10, clause 6.8 for frequency stability tests
	☒ Frequency stability with respect to ambient temperature
	☒ Frequency stability when varying supply voltage
☐	For conducted measurement.
☒	For radiated measurement. The equipment to be measured and the test antenna shall be oriented to obtain the maximum emitted power level.

3.5.4 Test Setup

Frequency Stability
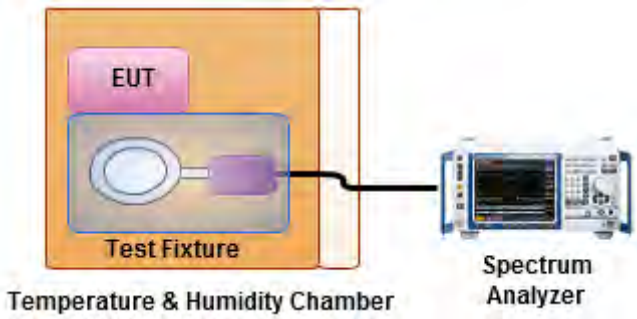

3.5.5 Test Result of Frequency Stability

Frequency Stability Result									
Condition	Ch. Freq. (MHz)	Frequency Stability (ppm)							
		Test Frequency (MHz)				Frequency Stability (ppm)			
		0 min	2 min	5 min	10 min	0 min	2 min	5 min	10 min
$T_{20°C}$Vmax	13.56	13.56038	13.56039	13.56039	13.56038	28.02	28.39	28.47	28.10
$T_{20°C}$Vmin	13.56	13.56038	13.56039	13.56039	13.56038	28.02	28.39	28.47	28.17
$T_{50°C}$Vnom	13.56	13.56030	13.56031	13.56031	13.56031	22.12	22.49	22.57	23.01
$T_{40°C}$Vnom	13.56	13.56032	13.56032	13.56032	13.56032	23.60	23.67	23.45	23.38
$T_{30°C}$Vnom	13.56	13.56036	13.56037	13.56036	13.56036	26.55	27.21	26.77	26.84
$T_{20°C}$Vnom	13.56	13.56038	13.56038	13.56039	13.56039	28.02	28.32	28.39	28.69
$T_{10°C}$Vnom	13.56	13.56040	13.56040	13.56041	13.56040	29.50	29.65	29.94	29.72
$T_{0°C}$Vnom	13.56	13.56044	13.56045	13.56044	13.56043	32.45	32.89	32.45	32.01
$T_{-10°C}$Vnom	13.56	13.56046	13.56045	13.56046	13.56046	33.92	33.48	33.92	33.78
$T_{-20°C}$Vnom	13.56	13.56048	13.56048	13.56049	13.56049	35.40	35.40	35.84	36.14
Limit (ppm)		100							
Result		Complied							

Note 1: Measure at 85 % [Vmin] and 115 % [Vmax] of the nominal voltage [Vnom]. The nominal voltage refer test report clause 1.1.6 for EUT operational condition.
Note 2: Measure maximum deviation frequency at operating frequency at startup and two, five, and ten min.

4 Test Equipment and Calibration Data

Instrument for AC Conduction

Instrument	Manufacturer	Model No.	Serial No.	Characteristics	Calibration Date	Calibration Due Date
EMC Receiver	KEYSIGHT	N9038A	MY54130031	20 Hz ~ 8.4 GHz	14/04/2016	13/04/2017
LISN	SCHWARZBECK MESS-ELEKTRONIK	NSLK 8127	8127-477	9 kHz ~ 30 MHz	26/01/2016	25/01/2017
RF Cable-CON	HUBER+SUHNER	RG213/U	07611832020001	9 kHz ~ 30 MHz	30/10/2015	29/10/2016
EMI Filter	LINDGREN	LRE-2030	2651	< 450 Hz	NCR	NCR

NCR: No Calibration Require.

Instrument for Conducted Test

Instrument	Manufacturer	Model No.	Serial No.	Characteristics	Calibration Date	Calibration Due Date
Spectrum Analyzer	R&S	FSP 40	100305	9 kHz ~ 40 GHz	16/02/2016	15/02/2017
Temp. and Humidity Chamber	Giant Force	GTH-225-20-SP-SD	MAA1112-007	-20 ~ 100℃	25/04/2016	24/04/2017
DC Power Source	G.W.	GPS-3030DD	GEN865896	DC 0V ~ 30V	14/01/2016	13/01/2017

Instrument for Radiated Test

Instrument	Manufacturer	Model No.	Serial No.	Characteristics	Calibration Date	Calibration Due Date
3m Semi Anechoic Chamber	SIDT FRANKONIA	SAC-3M	03CH03-HY	30 MHz ~ 1GHz 3m	28/11/2015	27/11/2016
3m Semi Anechoic Chamber	SIDT FRANKONIA	SAC-3M	03CH03-HY	1 GHz ~ 18 GHz 3m	16/12/2015	15/12/2016
Amplifier	HP	8447D	2944A08033	10 kHz ~ 1.3 GHz	10/05//2016	09/05/2017
Spectrum	R&S	FSV40	101513	9 kHz ~ 40 GHz	16/02/2016	15/02/2017
Bilog Antenna	SCHAFFNER	CBL 6112D	22237	30 MHz ~ 1 GHz	18/09/2015	17/09/2016
Loop Antenna	TESEQ	HLA 6120	31244	9 kHz~30 MHz	02/02/2015	01/02/2017