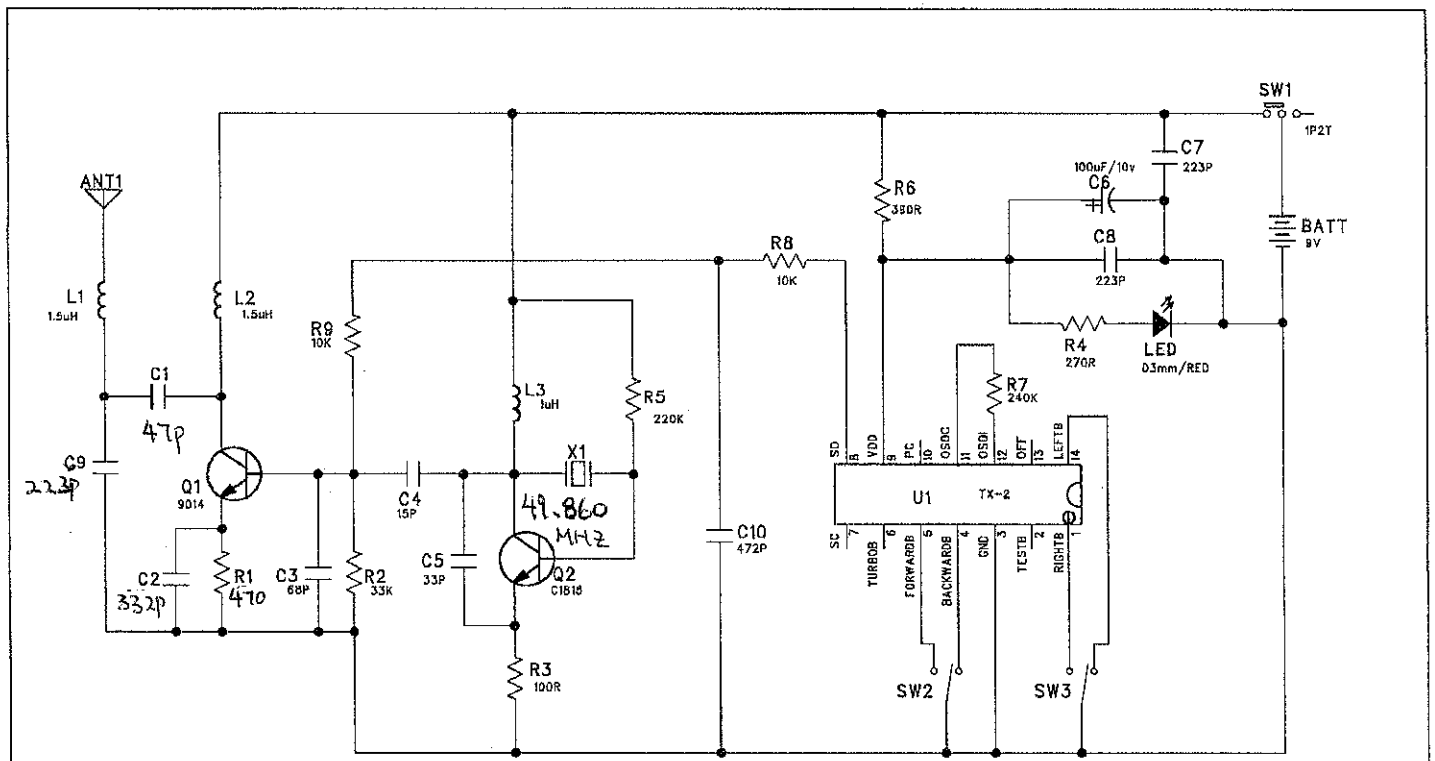

Title: ENERTEC ENTERPRISES LTD		
Size: A4	Number: 7004 49MHz Tx	Revision: FCC
Date: FEB28,2006	Sheet 1 of 1	
File:		