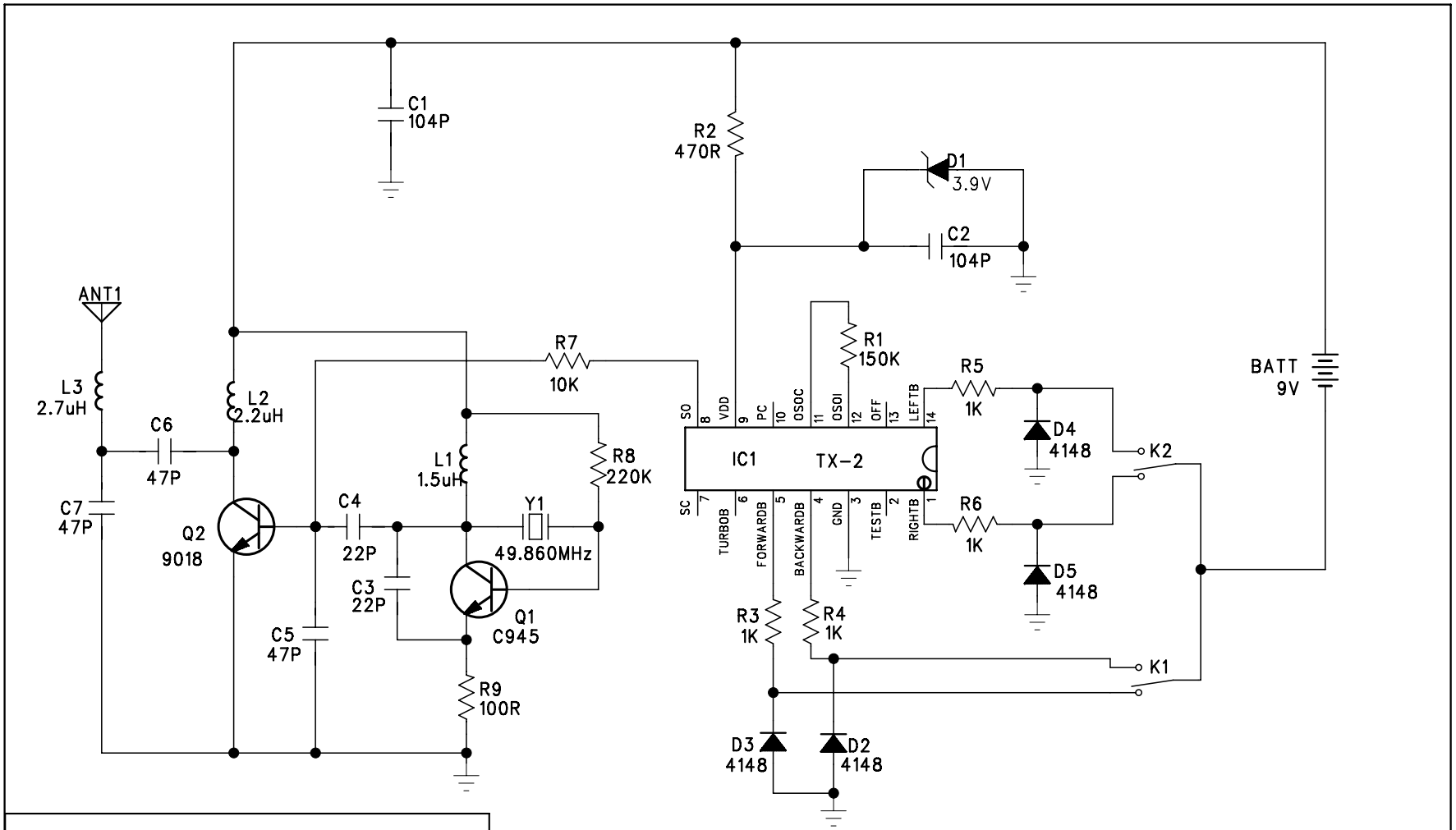

ENERTEC ENTERPRISES LTD		
Size A4	Number 12371 Tx 49MHz	Revision FCC
Date: 2007 JUL 20	Sheet 1 of 1	
File:		