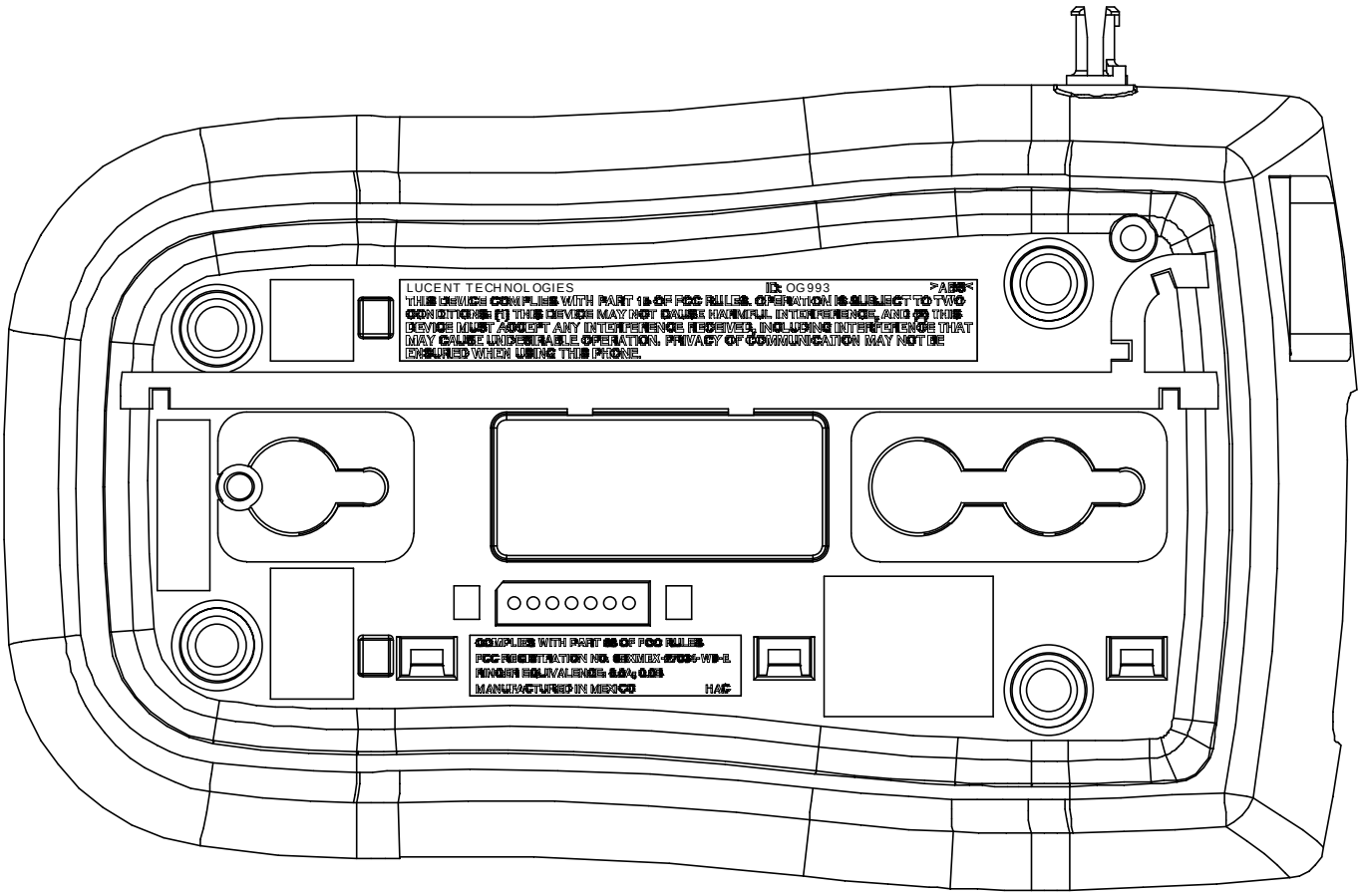
LUCENT TECHNOLOGIES
ID: OG993
>ABS<
THIS DEVICE COMPLIES WITH PART 15 OF FCC RULES. OPERATION IS SUBJECT TO TWO CONDITIONS: (1) THIS DEVICE MAY NOT CAUSE HARMFUL INTERFERENCE, AND (2) THIS DEVICE MUST ACCEPT ANY INTERFERENCE RECEIVED, INCLUDING INTERFERENCE THAT MAY CAUSE UNDESIRABLE OPERATION. PRIVACY OF COMMUNICATION MAY NOT BE ENSURED WHEN USING THIS PHONE.
COMPLIES WITH PART 68 OF FCC RULES
FCC REGISTRATION NO. 6EXMEX-27004-WB-E
RINGER EQUIVALENCE: 0.0A, 0.0B
MANUFACTURED IN MEXICO
HAC

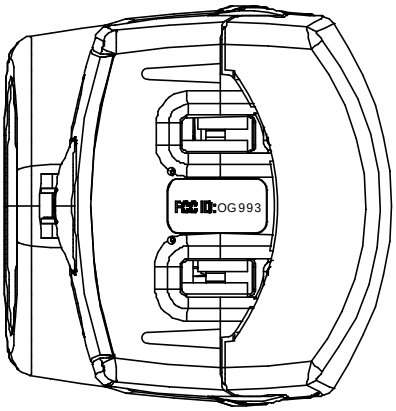
FCC ID: OG993