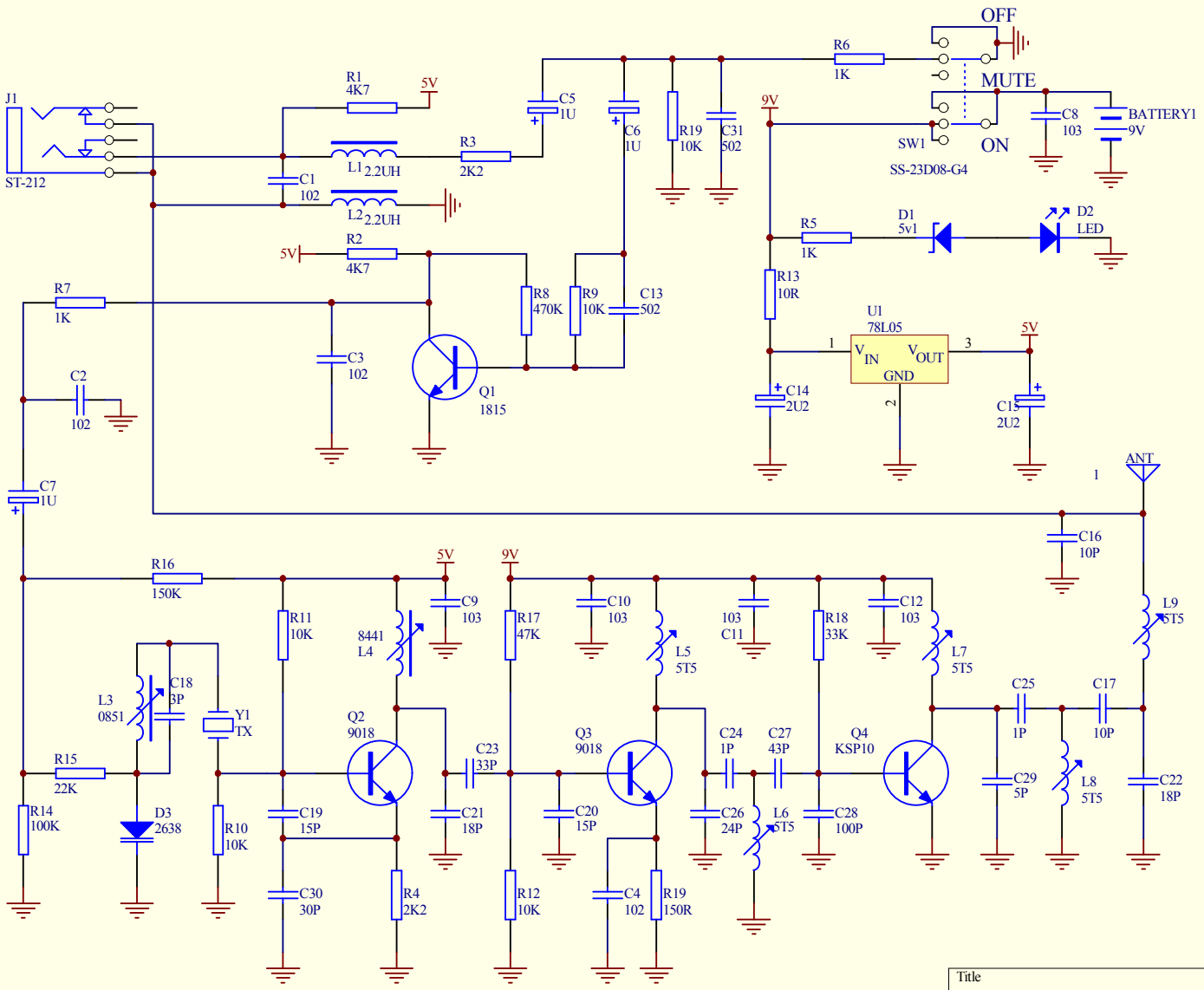

Title	
Size A4	Number
Date: 18-Jan-2011	Shee
File: C:\Users\Administrator\Desktop\3122\RX.DDB	Draw