REVISIONS					
REV	ECN	CHG.DESC.	DR	AP	DATE
0	ENG	RELEASE			

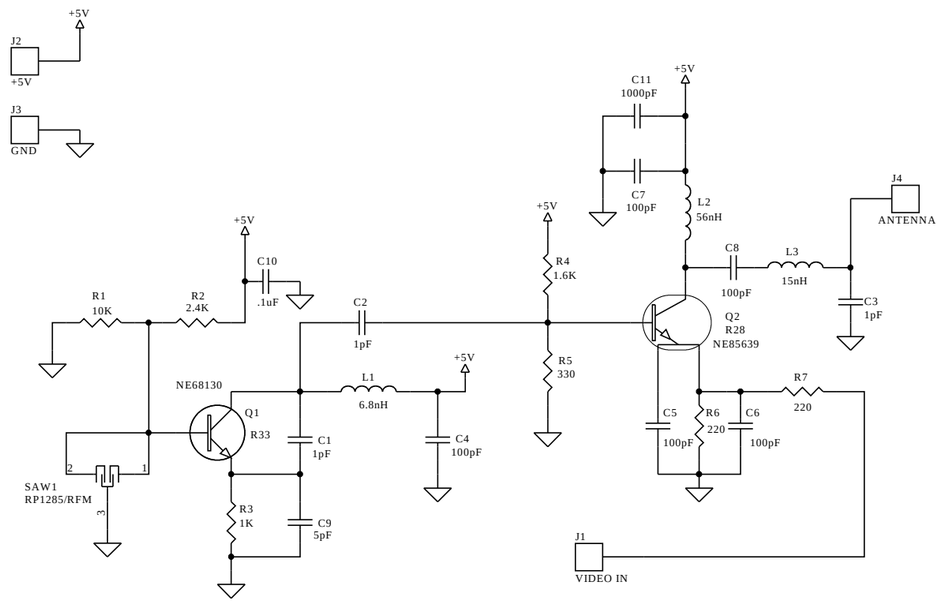

UNLESS OTHERWISE SPECIFIED RESISTORS ARE 1/4WATT AND VALUES ARE IN OHMS. CAPACITOR VALUES ARE IN MICROFARADS.

Approved	Date	
Checked	Date	
Drawn	Date	

KEN-A-VISION

Title: ***900MHz VIDEO TRANSMITTER***

Size B	Number 31600	Revision A1.1
Date: 16-Mar-2000	Sheet 1 of 1	
Filename: D:\KEN\900MHZ\900MHZTR.SCH		