LOADWISE 315 TRANSMITTER BLOCK DIAGRAM

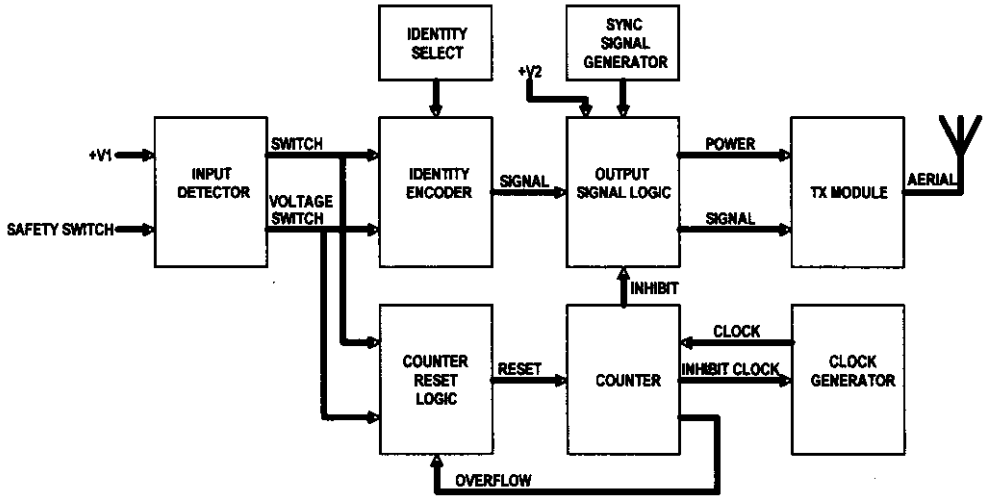

LOADWISE 315 TRANSMITTER PSU DIAGRAM

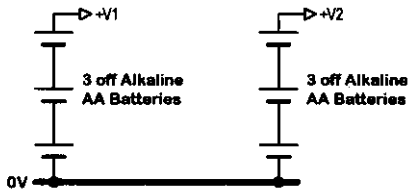

FCC ID: OEF-LW315T5

Title: LOADWISE 315 TRANSMITTER BLOCK DIAGRAMS		
Size: A4	Number: 315 TX BD	Revision: 1
Date: 25-Feb-1999	Sheet 1 of 1	
File: E:\Client98\315TxBlock.sch	Drawn By: CNM	

OAD INSTRUMENTATION LIMITED