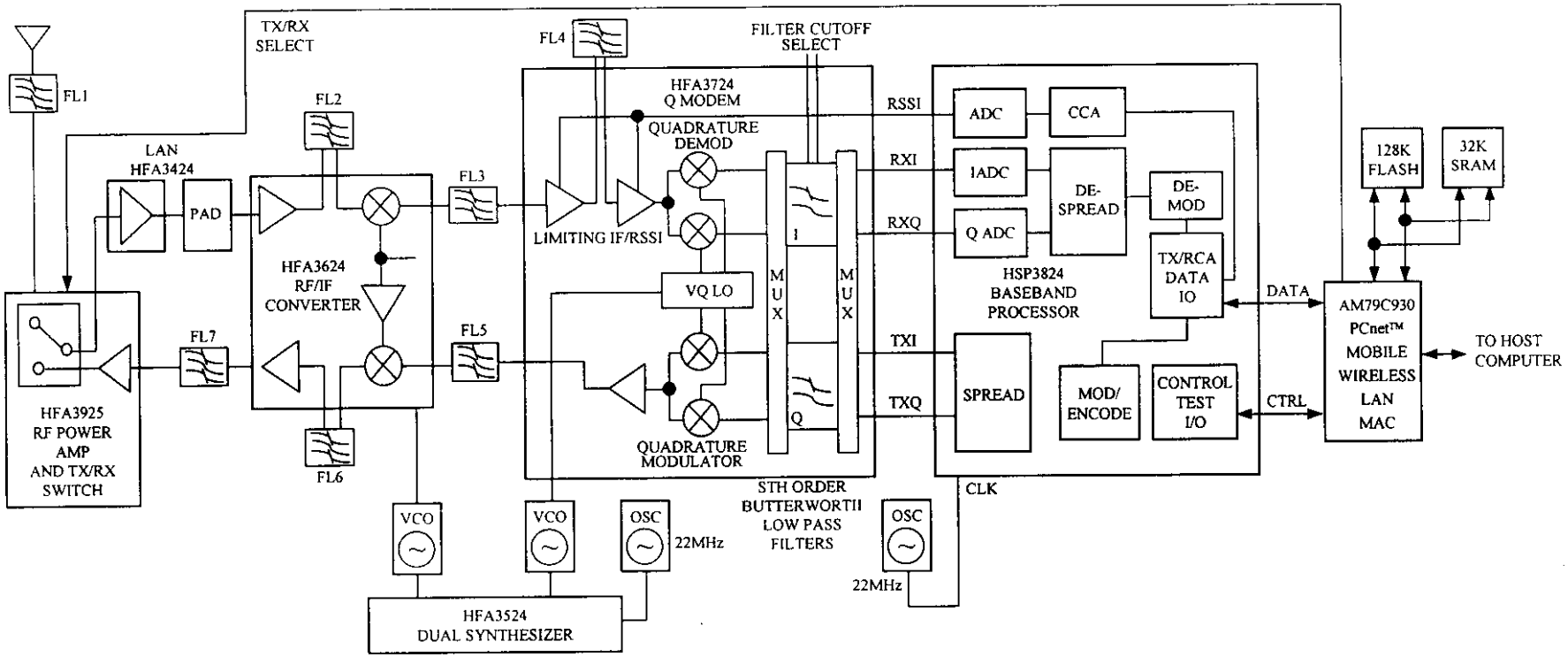

FUYEN TECHOLOGY CO., LTD.			
WLAN BLOCK DIAGRAM			
DISIGN		DRAGT	