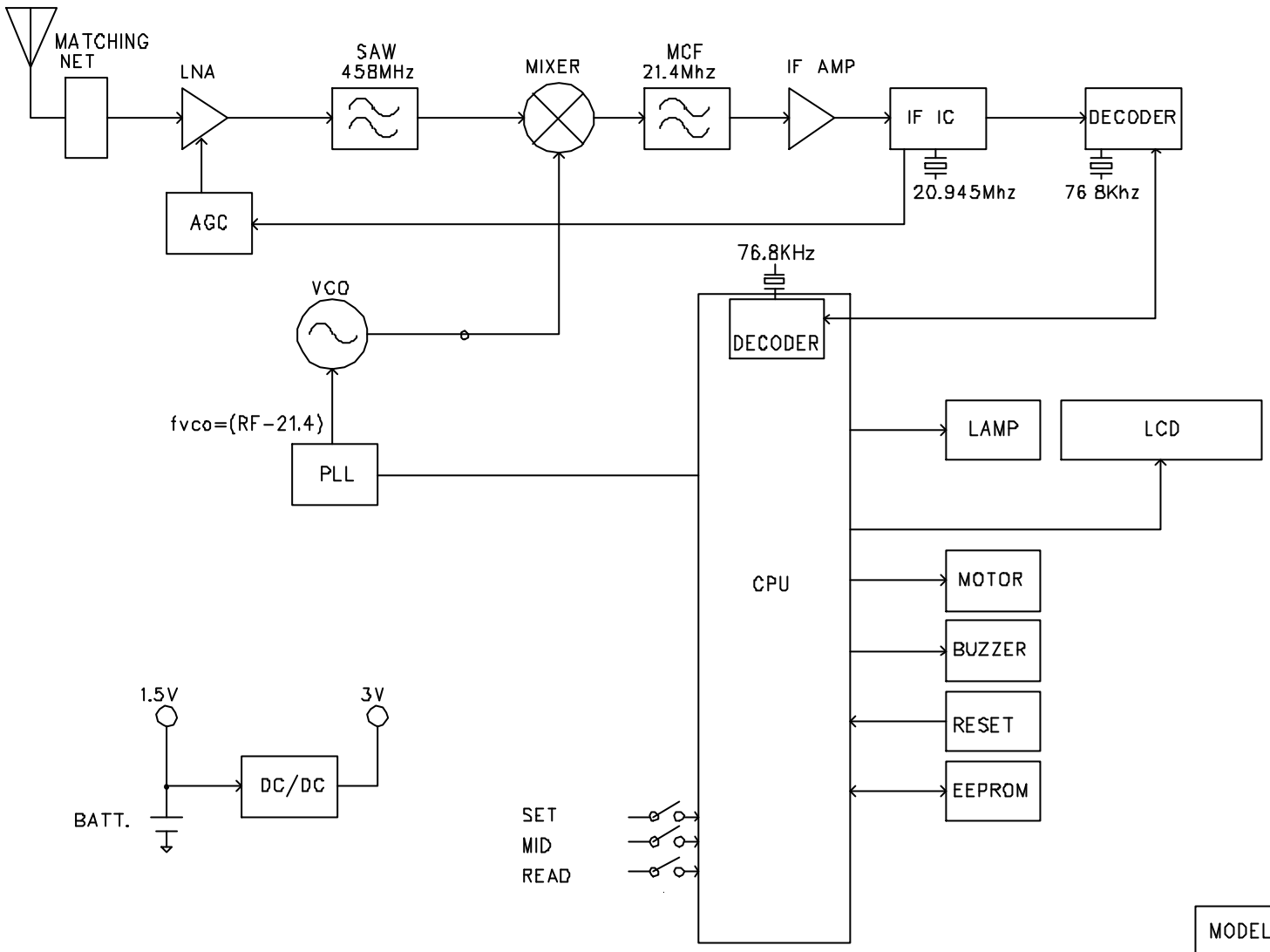

MODEL	ST-750PP UHF	
TITLE	BLOCK DIAGRAM	
REV.	00	HANTEL CO. LTD