FN-8130B	initial	201205028

Schematic diagram

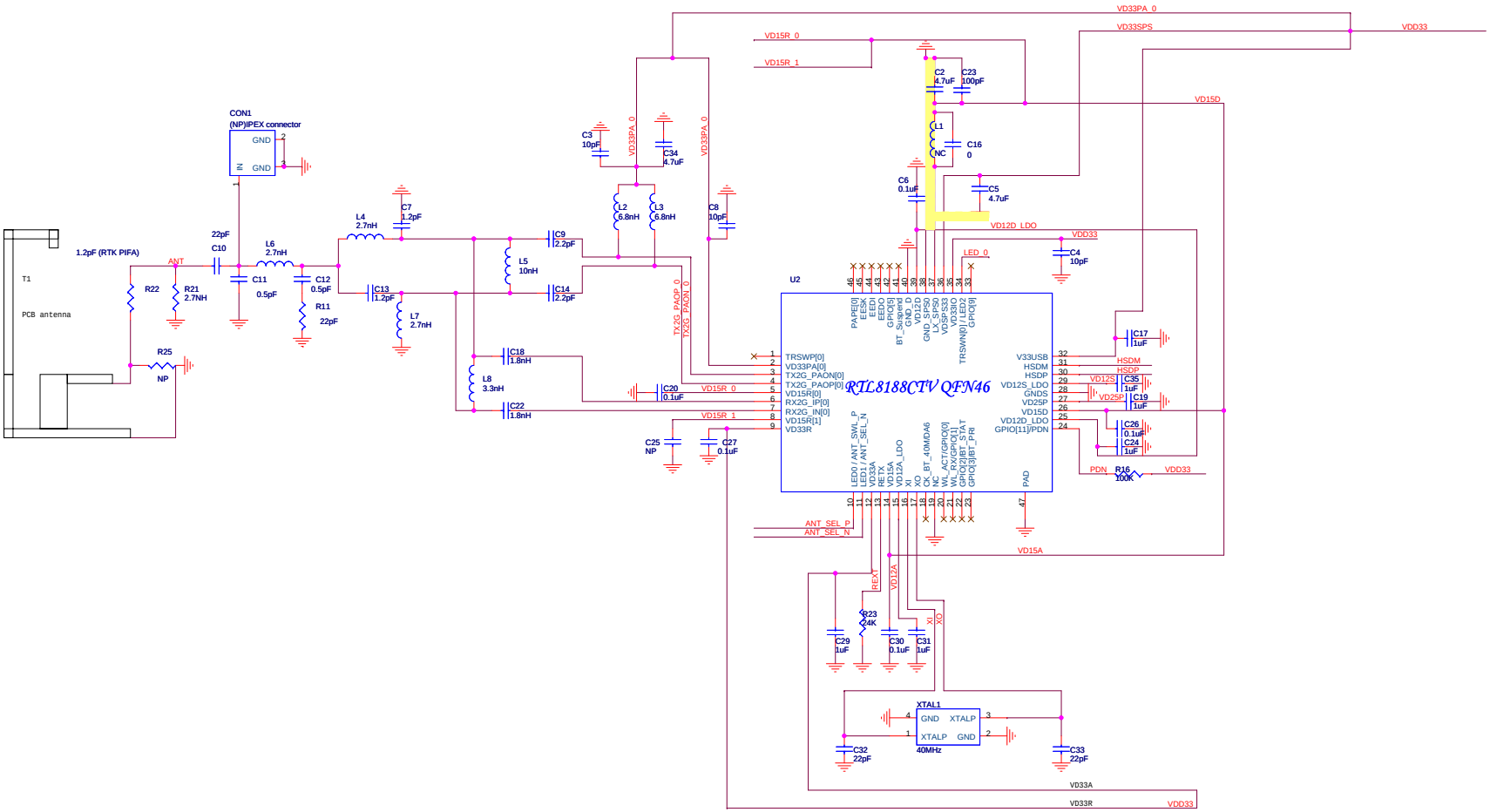

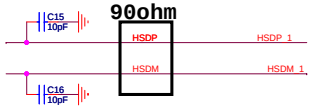

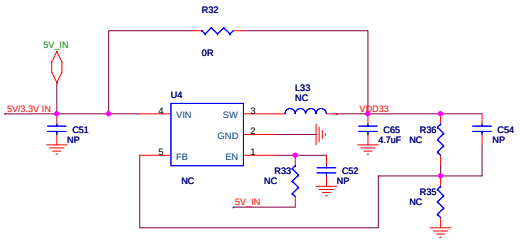

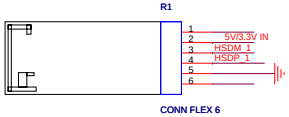

Title	RTL8188CTV_FN-8130B	
Size C	Document Number <Doc> <RevCode>	Rev
Date: Wednesday, June 06, 2012	Sheet 1 of 1	