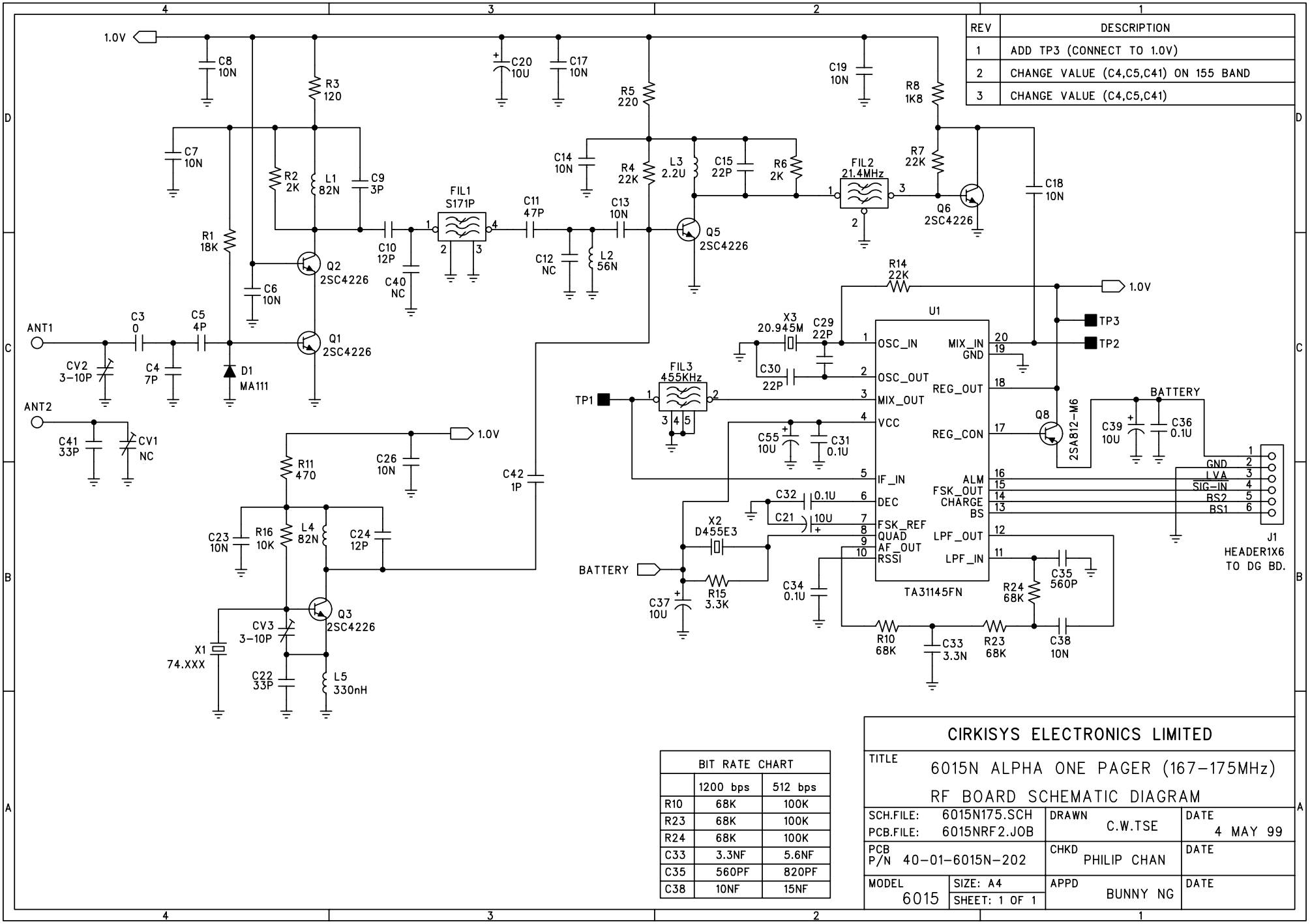

REV	DESCRIPTION
1	ADD TP3 (CONNECT TO 1.0V)
2	CHANGE VALUE (C4,C5,C41) ON 155 BAND
3	CHANGE VALUE (C4,C5,C41)

BIT RATE CHART		
	1200 bps	512 bps
R10	68K	100K
R23	68K	100K
R24	68K	100K
C33	3.3NF	5.6NF
C35	560PF	820PF
C38	10NF	15NF

CIRKISYS ELECTRONICS LIMITED

TITLE: 6015N ALPHA ONE PAGER (167-175MHz) RF BOARD SCHEMATIC DIAGRAM

SCH.FILE: 6015N175.SCH PCB.FILE: 6015NRF2.JOB	DRAWN C.W.TSE	DATE 4 MAY 99
PCB P/N 40-01-6015N-202	CHKD PHILIP CHAN	DATE
MODEL 6015 / SIZE: A4 / SHEET: 1 OF 1	APPD BUNNY NG	DATE