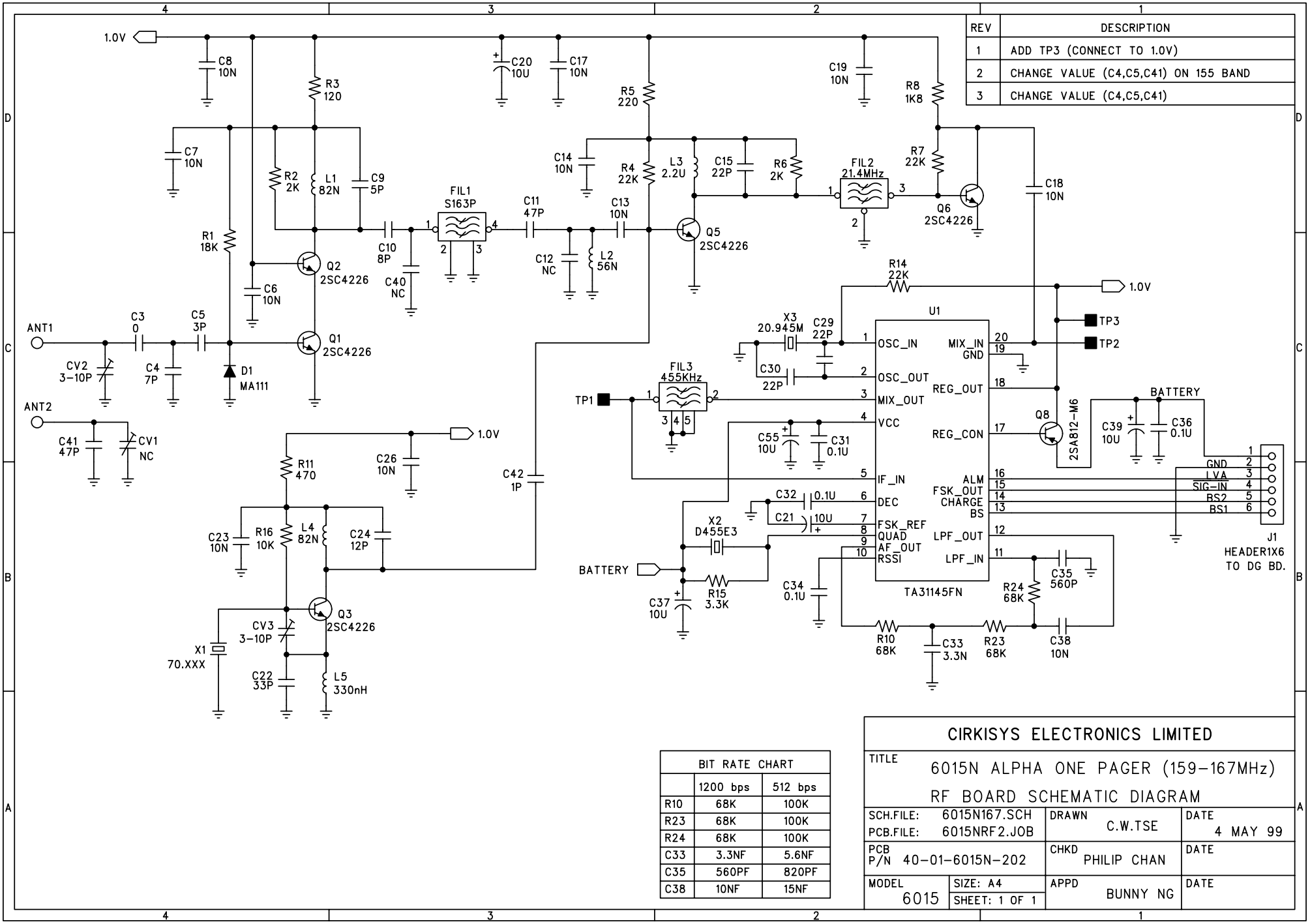


| REV | DESCRIPTION |
|---|---|
| 1 | ADD TP3 (CONNECT TO 1.0V) |
| 2 | CHANGE VALUE (C4,C5,C41) ON 155 BAND |
| 3 | CHANGE VALUE (C4,C5,C41) |

| BIT RATE CHART | | |
|---|---|---|
| | 1200 bps | 512 bps |
| R10 | 68K | 100K |
| R23 | 68K | 100K |
| R24 | 68K | 100K |
| C33 | 3.3NF | 5.6NF |
| C35 | 560PF | 820PF |
| C38 | 10NF | 15NF |

CIRKISYS ELECTRONICS LIMITED

TITLE: 6015N ALPHA ONE PAGER (159-167MHz) RF BOARD SCHEMATIC DIAGRAM

| | | |
|---|---|---|
| SCH.FILE: 6015N167.SCH<br>PCB.FILE: 6015NRF2.JOB | DRAWN C.W.TSE | DATE 4 MAY 99 |
| PCB P/N 40-01-6015N-202 | CHKD PHILIP CHAN | DATE |
| MODEL 6015 / SIZE: A4 / SHEET: 1 OF 1 | APPD BUNNY NG | DATE |