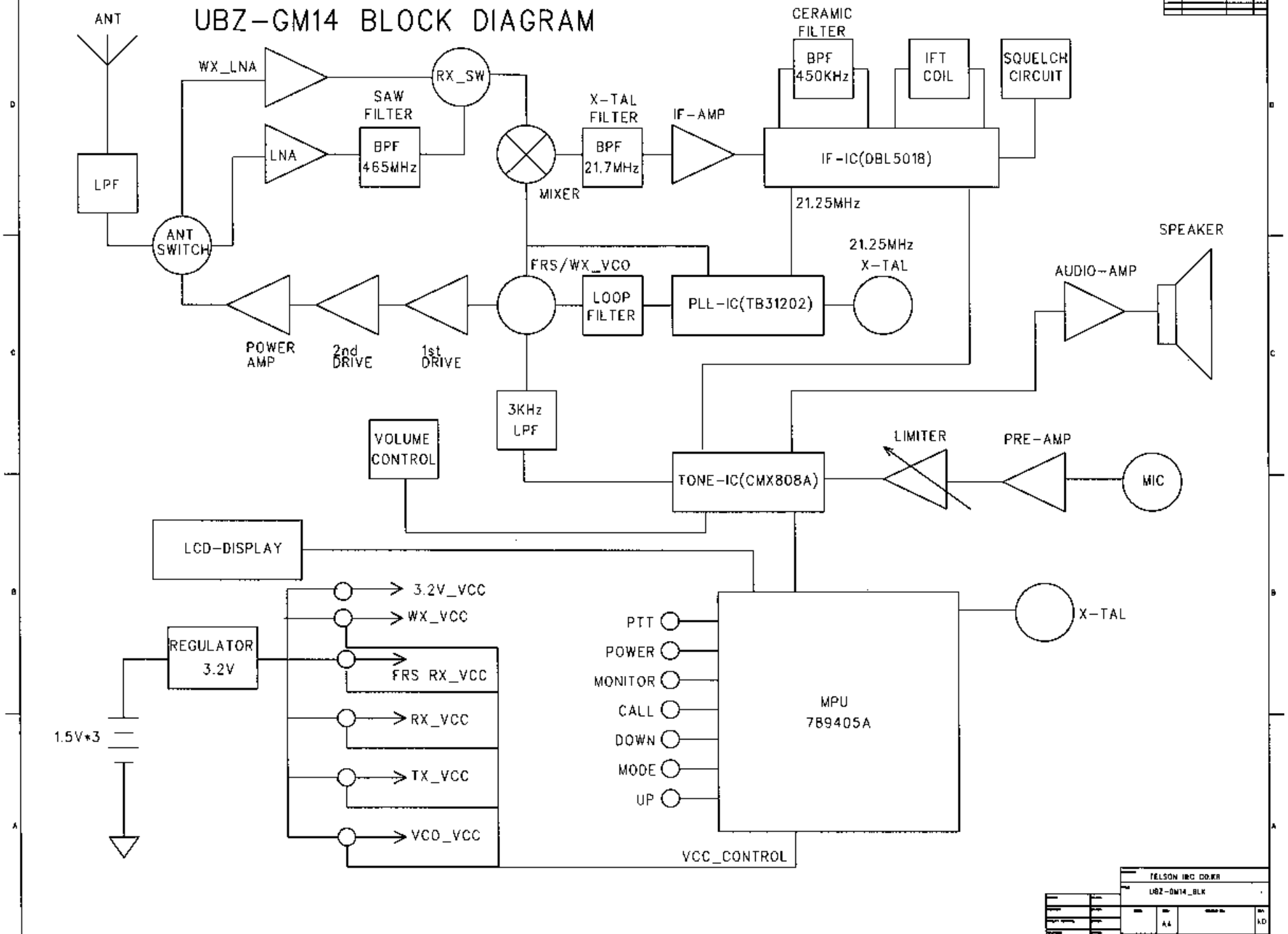UBZ-GM14 BLOCK DIAGRAM