THE BLOCK DIAGRAM of T-20A

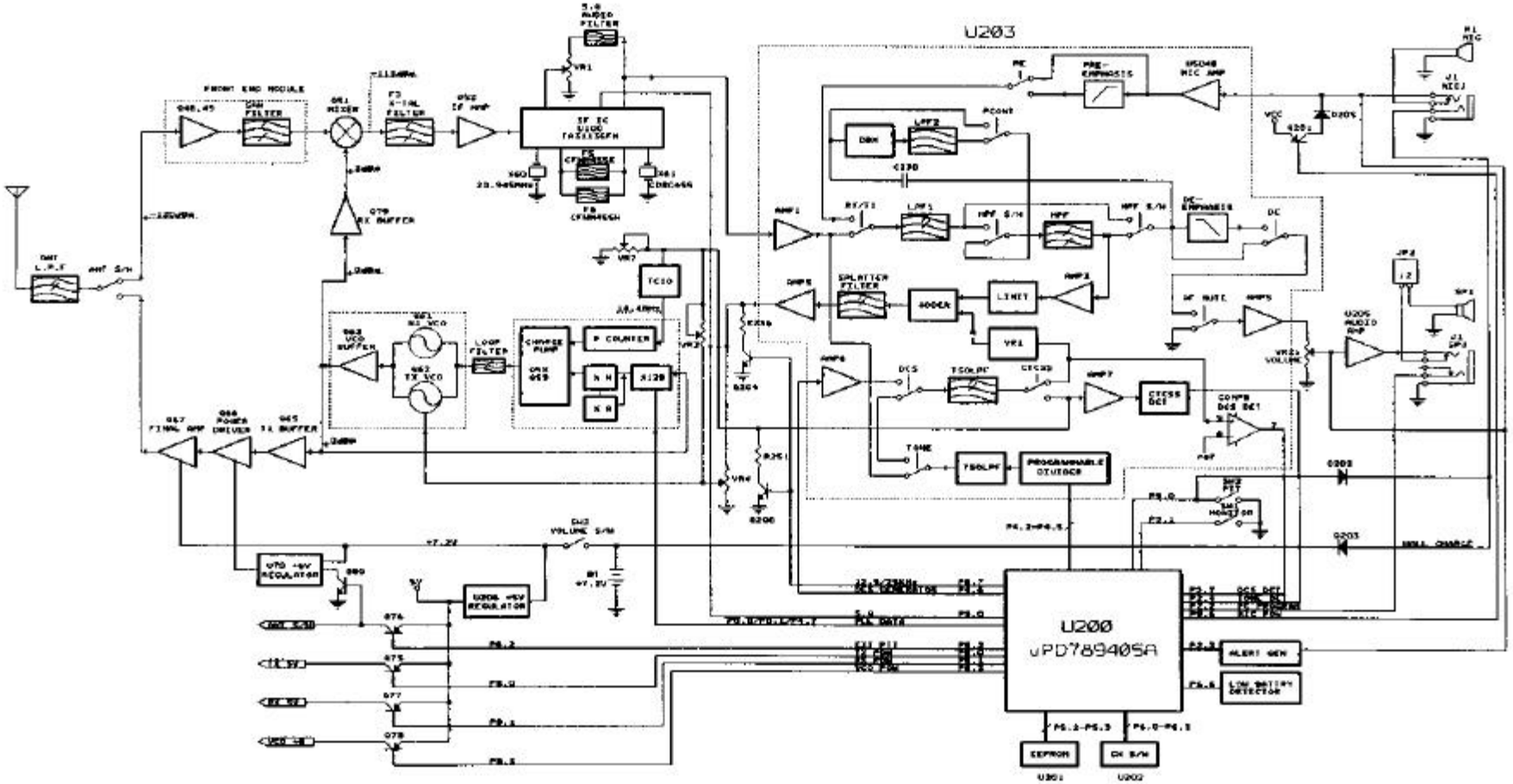

TELSON INFORMATION & COMMUNICATIONS CO.,LTD

Title: T-20A BLOCK DIAGRAM

Size: A2 | Document Number: T-20BLK.SCH | Rev: 1

Date: April 18, 2000(Mon) | Sheet 1 of