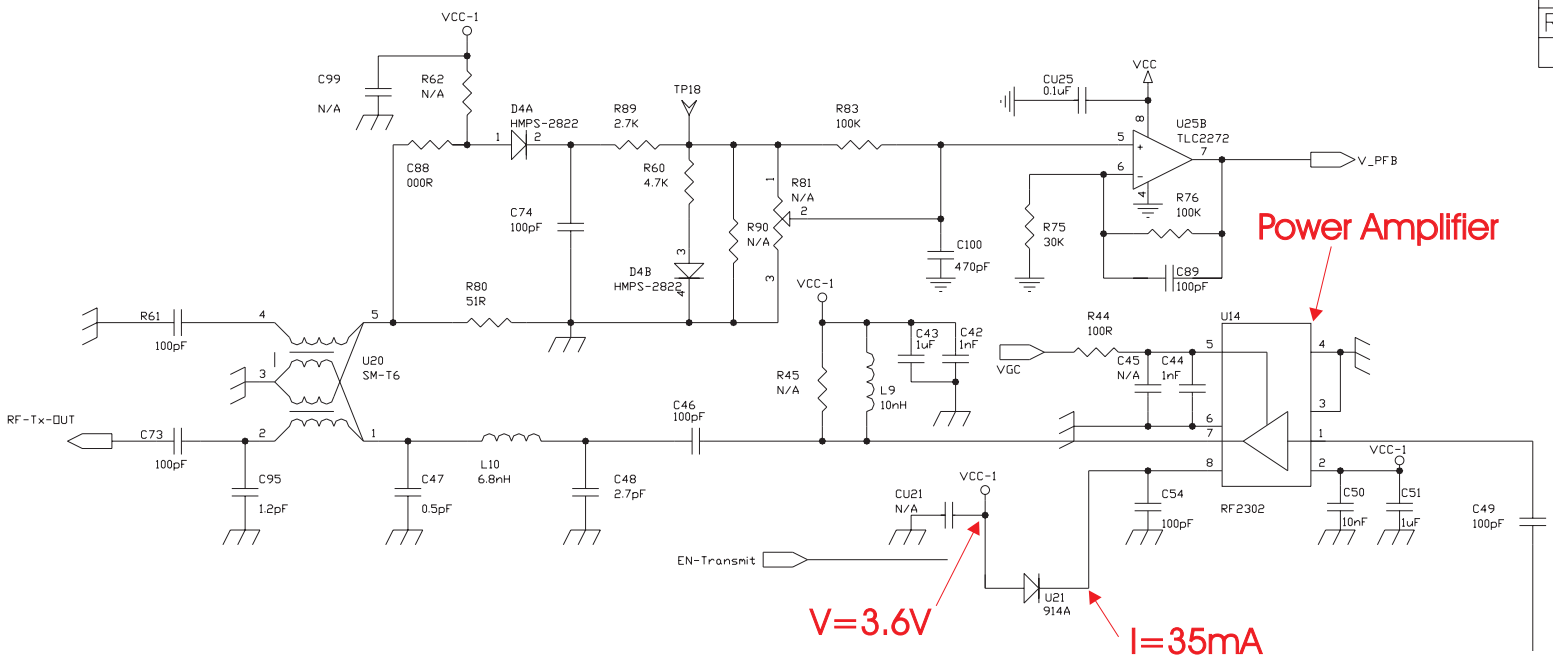

Voltages and currents
Page 4/4 of schematic