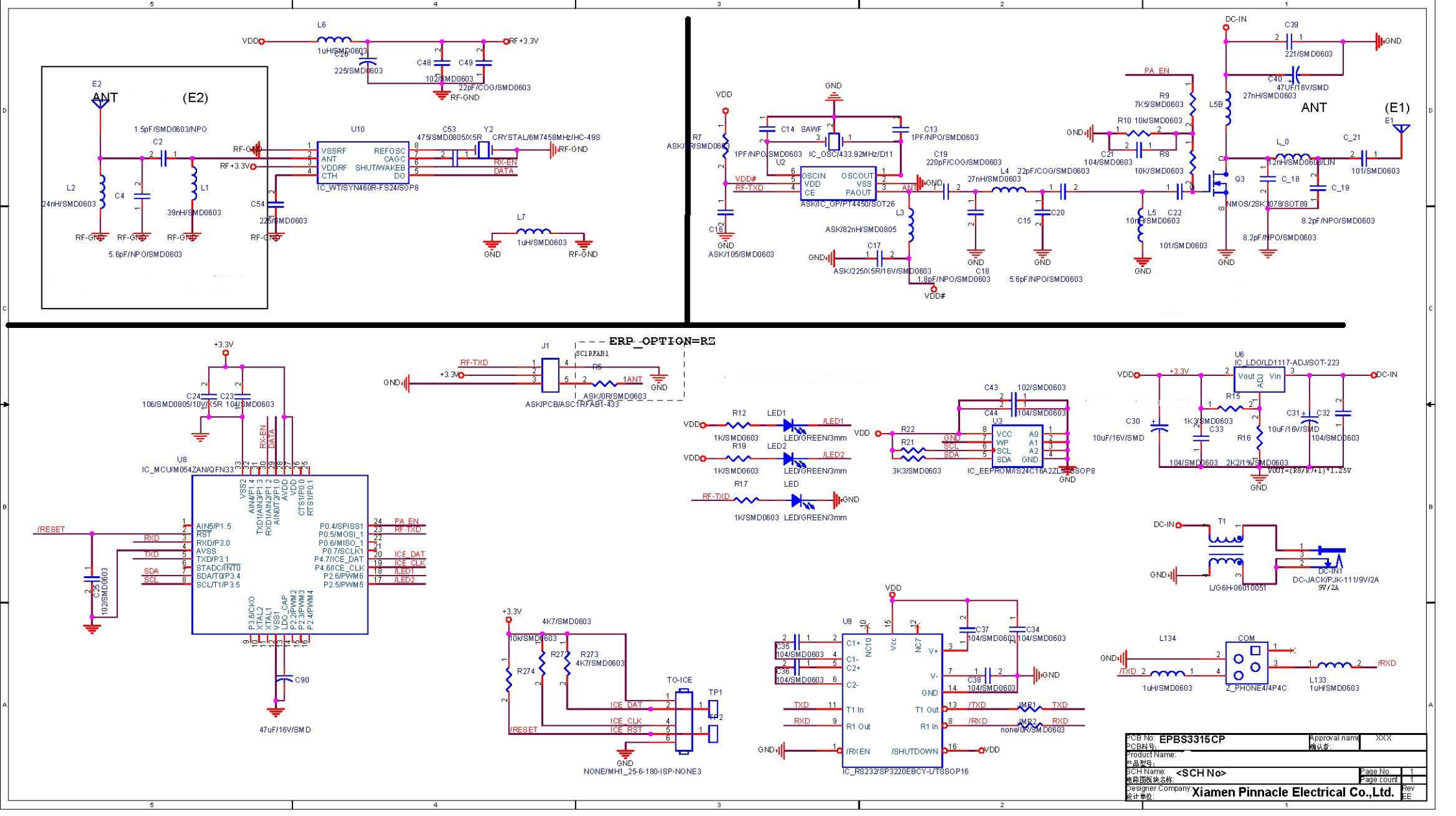
ERP_OPTION=RZ
U10
IC_WT/SYN460R-FS24/SOP8
U2
ASK/IC_OP/PT4450/SOT26
U8
IC_MCU/M054ZAN/QFN33
U9
IC_RS232/SP3220EBCY-UTSSOP16
U3
IC_EEPROM/IS24C16A2ZLI-TSSOP8
U6
IC_LDO/LD1117-ADJ/SOT-223
J1
ASK/PCB/ASC1RFAB1-433
TO-ICE
NONE/MH1_25-6-180-ISP-NONE3
DC-JACK/PJK-111/9V/2A
Z_PHONE4/4P4C
Q3
NMOS/2SK1078/SOT89
ANT
(E2)
(E1)
PCB No: EPBS3315CP
Approval name: XXX
Product Name:
SCH Name: <SCH No>
Page No. 1
Page count 1
Designer Company: Xiamen Pinnacle Electrical Co.,Ltd.
Rev EE