18 BLOCK DIAGRAM

MURS-22 BLOCK DIAGRAM

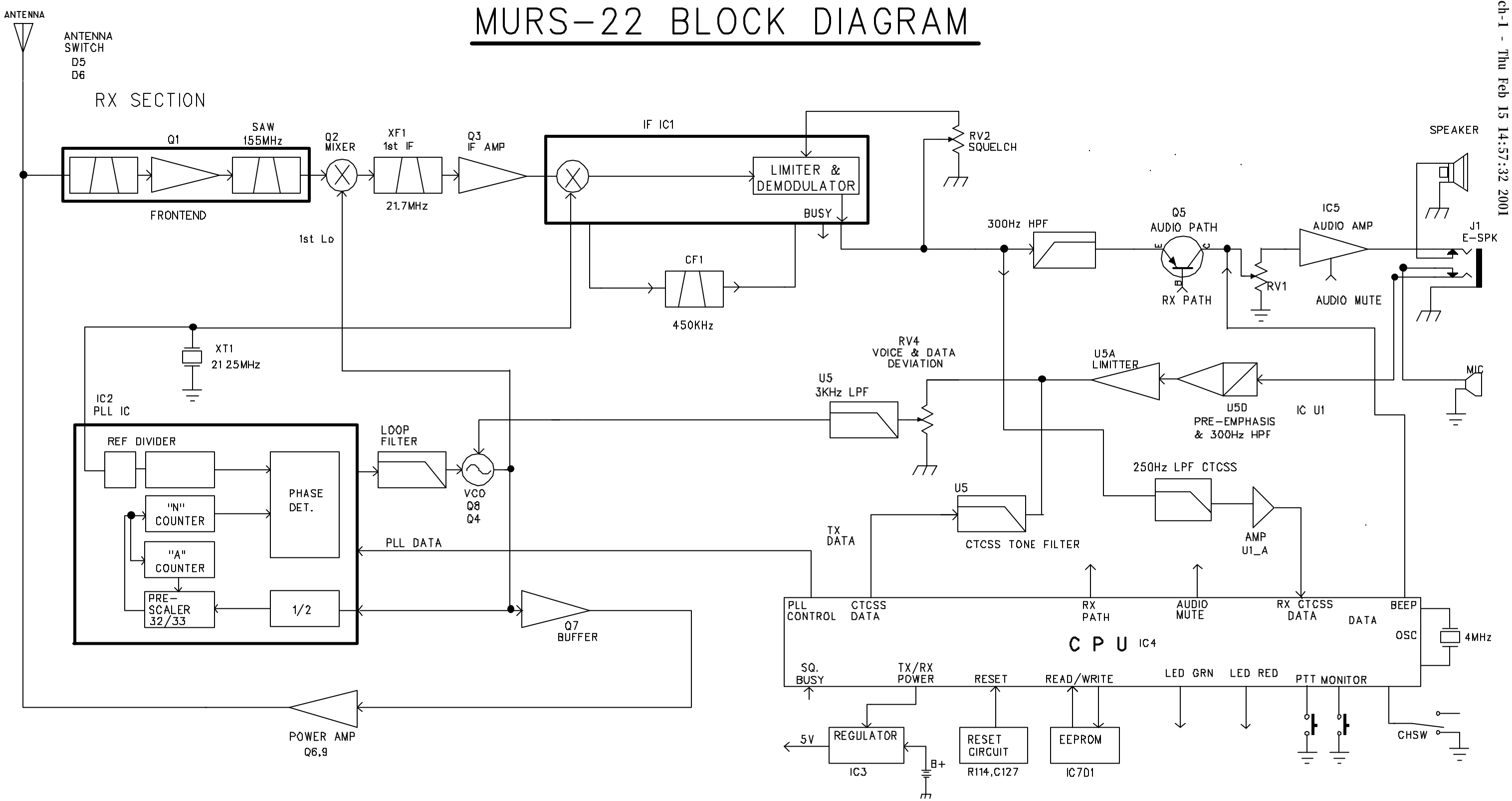

MURS-22 REV 0
FEB. 9. 2001 NEXCOMM