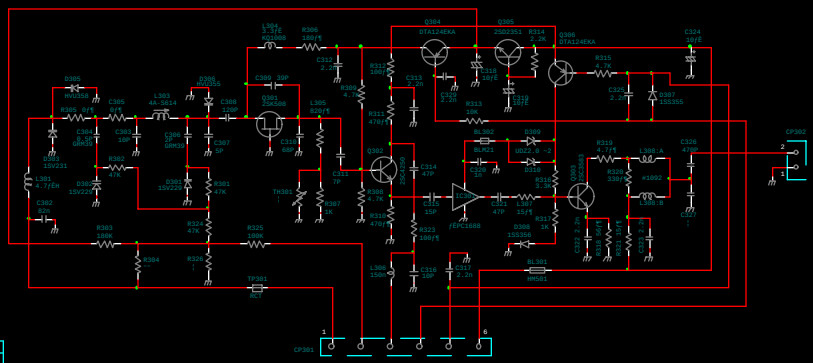

No	A	C			
C303		16P			
C304		¦			
C306		2P			
C307		5P			
C308		82P			
C309		33P			
C310		33P			
D301		1SS226			
D302		¦			
D303		1SS231			
D305		¦			
D308		1SS239			
		¦			
L304		2.2μE			
L305		150μ¶			
R303		100K			

³″F	ŒÝ }	‹¦″¯′Ê M‹@ »′¢Š″ ®‰Ï
		-¼ Ï KG510-03B
		TX VCO UNIT CIRCUIT DIAGRAM
ÝŒV	» }	}″Ð 3A-SA0035
		51TC30Y