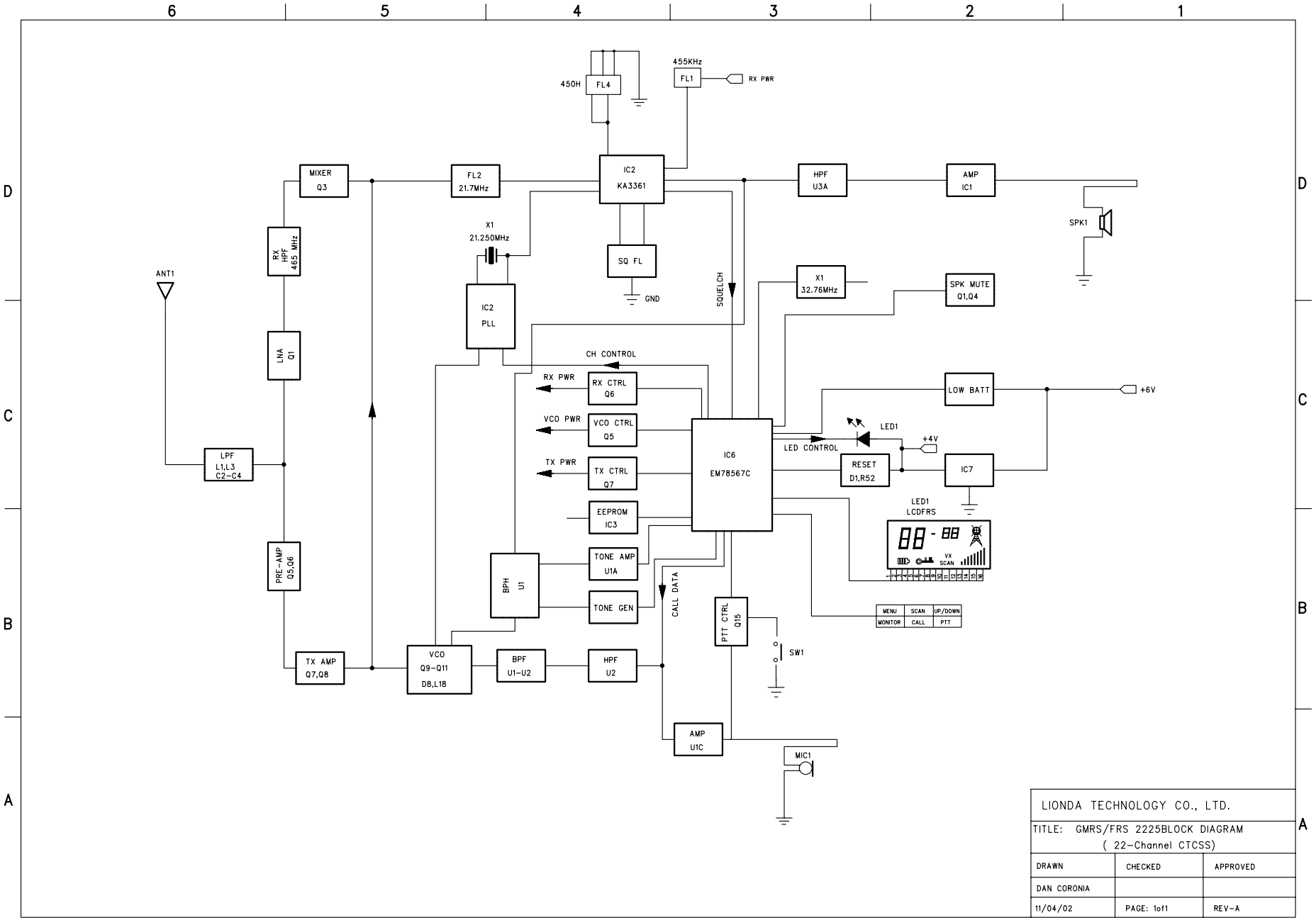
6
5
4
3
2
1
D
C
B
A
450H
FL4
455KHz
FL1
RX PWR
MIXER
Q3
FL2
21.7MHz
IC2
KA3361
HPF
U3A
AMP
IC1
SPK1
X1
21.250MHz
SQ FL
GND
SQUELCH
X1
32.76MHz
SPK MUTE
Q1,Q4
ANT1
RX
HPF
465 MHz
IC2
PLL
LNA
Q1
CH CONTROL
RX PWR
RX CTRL
Q6
LOW BATT
+6V
VCO PWR
VCO CTRL
Q5
LED1
+4V
LED CONTROL
TX PWR
TX CTRL
Q7
IC6
EM78567C
RESET
D1,R52
IC7
LPF
L1,L3
C2-C4
EEPROM
IC3
LED1
LCDFRS
PRE-AMP
Q5,Q6
BPH
U1
TONE AMP
U1A
TONE GEN
CALL DATA
PTT CTRL
Q15
MENU
SCAN
UP/DOWN
MONITOR
CALL
PTT
SW1
TX AMP
Q7,Q8
VCO
Q9-Q11
D8,L18
BPF
U1-U2
HPF
U2
AMP
U1C
MIC1
LIONDA TECHNOLOGY CO., LTD.
TITLE: GMRS/FRS 2225BLOCK DIAGRAM
(22-Channel CTCSS)
DRAWN
CHECKED
APPROVED
DAN CORONIA
11/04/02
PAGE: 1of1
REV-A