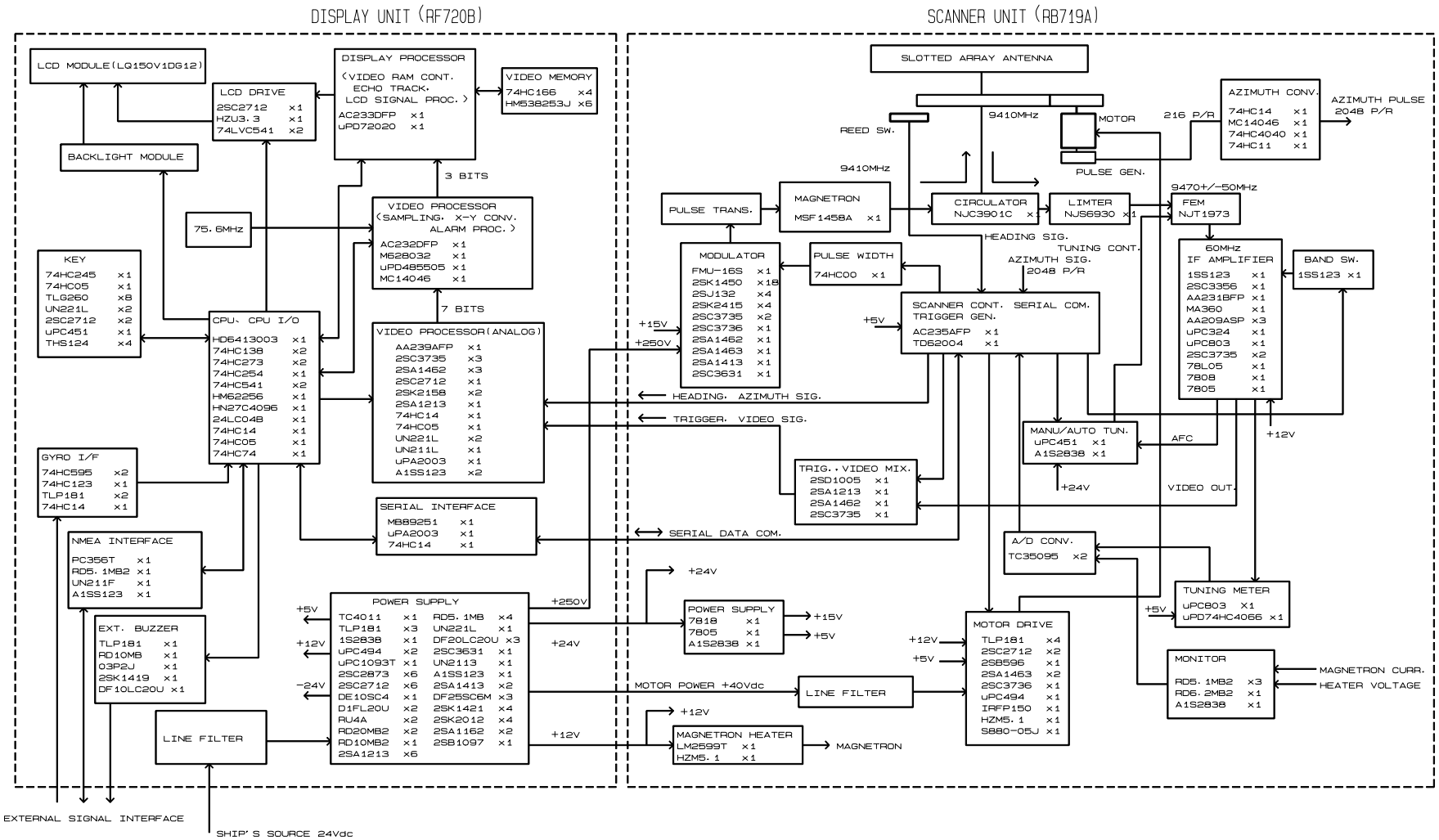

MOD	CONTENTS	DATE	REVISED	CHECKED	APPROVED

APPROVED	CHECKED	DRAWN	DESIGNED

MODEL: RA55

KODEN ELECTRONICS CO.LTD.

TITLE: SYSTEM BLOCK DIAGRAM

DWG. NO.: E43CFB0120

PAGE: 1/1