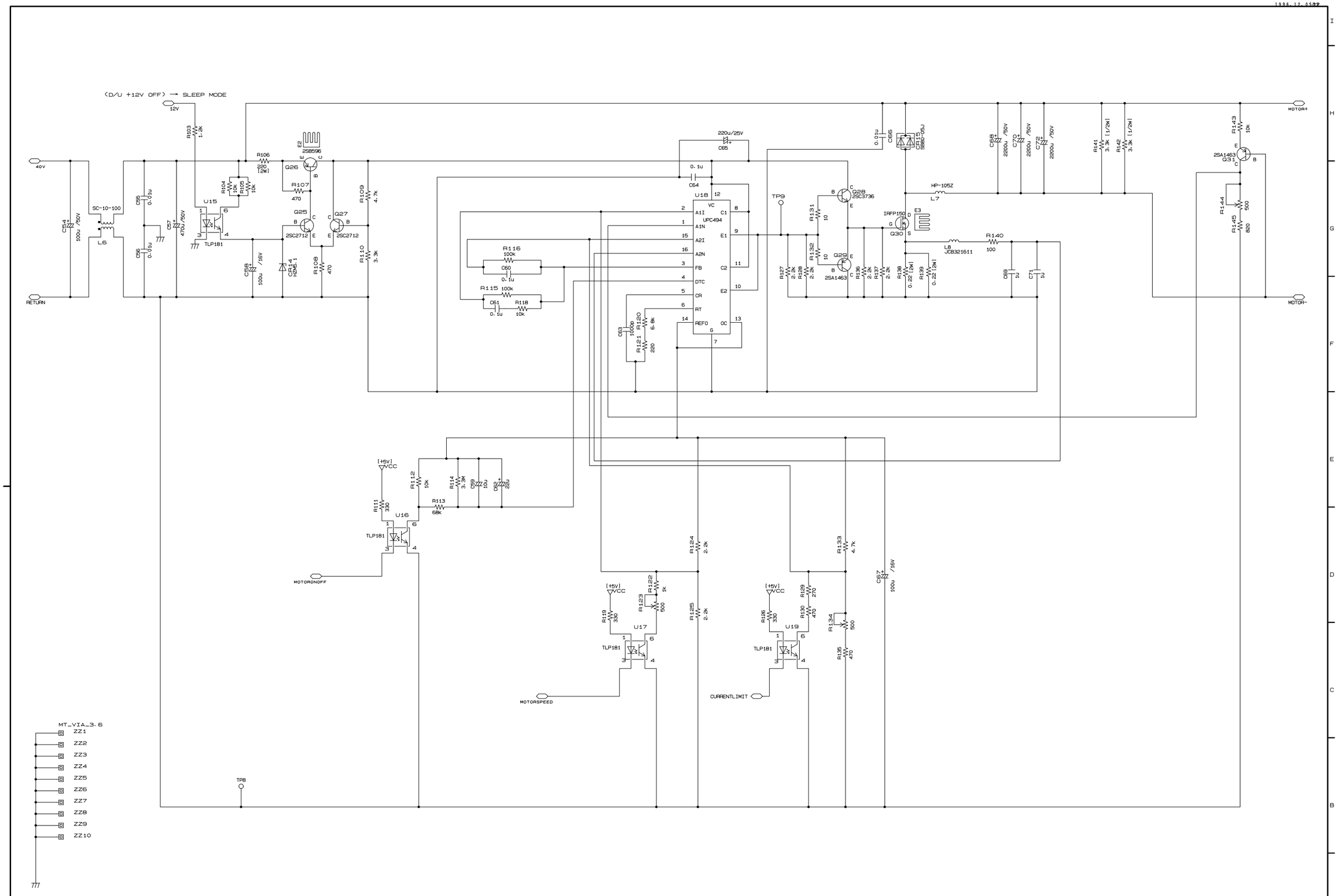

MOD	CONTENTS	DATE	REVISED	CHECKED	APPROVED

APPROVED	CHECKED	DRAWN	DESIGNED	MODEL	TITLE
		H. ITO 2001/06/04	H. ITO 2001/06/04	RB717A/718A	MODULATOR BOARD E41-100A/-101A
				KODEN ELECTRONICS CO.LTD.	DWG. NO. E41CGB100A0 .002 / PAGE 2/2